# INTERNATIONAL, FLORIDA AND CALIFORNIA BUILDING CODES ENGINEERING EVALUATION REPORT

| | | | |
|---|---|---|---|
| Report Number | 0064-15 | Issue Date | 2026-09-23 |
| Client | Davinci Roofscapes, LLC | Issue Number | 7-6136 |
| Address | 13890 W 101 St, Lenexa, KS 66215 | Expiry Date | 2027-12-31 |

## Subject

**DaVinci Slate, DaVinci Shake, Select Shake, Fancy Shake, Inspire Classic Slate, Province Slate, and Province Shake.**

## Evaluation Scope

This report is provided to assist registered design professionals and building officials in the United States for determining compliance to the performance objectives in the named building codes. The product(s) described herein have been evaluated to the:

**2024 International Building Code (IBC);**
**2021 International Building Code (IBC);**
**2026 Florida Building Code (FBC);**
**2025 California Building Code (CBC);**
**2024 International Residential Code (IRC);**
**2021 International Residential Code (IRC).**
**2026 Florida Residential Code (FBC-R);**
**2025 California Residential Code (CRC);**

**CSI DIVISION:** 07 00 00 THERMAL AND MOISTURE PROTECTION
**SUBDIVISION:** 07 32 26 Plastic Roof Tiles

**IBC CATEGORY:** Roofing
**SUB-CATEGORY:** Products Introduced as a Result of New Technology

**CODE SECTIONS AND STANDARDS**

| 2024 IBC Section | Description | Referenced Standard or Code Section[1] | Year |
|---|---|---|---|
| 104.2.3 | Alternative Materials, Design and Methods of Construction and Equipment | - | - |
| 1504.4 | Wind Resistance of Nonballasted Roofs | IBC Section 1609 | - |
| 1504.4.1 | Wind Uplift Resistance (Non-HVHZ) | UL 580 | 2006 |
| 1505 | Fire Classification (Non-HVHZ) | ASTM E108 | 2020a |
| 1507.8.8 | Flashing | ASTM D1970 | 2021 |
| 2606.4 | Burning Rate | ASTM D635 | 2018 |
| 2606.4 | Self-Ignition Temperature | ASTM D1929 | 2020 |
| 2606.4 | Smoke Density Rating | ASTM D2843 | 2022 |

| 2024 IRC Section | Description | Referenced Standard or Code Section[1] | Year |
|---|---|---|---|
| R902.1 | Fire Classification | ASTM E108 | 2020a |
| R904.3 | Material Specifications and Physical Characteristics | - | - |
| R905.1 | Roof Covering Application | IRC Table R301.2.1(1), R301.2.1(2) | - |

1. Only the applicable reference standards and code sections cited in the main body text are listed. (-) indicates that the main body text covers the full explanation of the objective.
2. Code section citing related roof covering performance requirements and referenced test standard.

## COMPLIANCE STATEMENT

It is the opinion of Boca Engineering Co. that DaVinci Slate, DaVinci Shake, Fancy Shake, Inspire Classic Slate, Province Slate, Province Shake, and Select Shake Roof Shingles, when installed as described in this report, has demonstrated compliance with the listed sections of the 2024 & 2021 International Building Code (IBC), 2024 & 2021 International Residential Code (IRC), 2026 Florida Building Code (FBC), 2026 Florida Residential Code (FBC-R), 2025 California Building Code (CBC), and 2025 California Residential Code (CRC). Design and performance information can be found in the *PRODUCT EVALUATION* section of this report.

This report has been prepared and reviewed on behalf of Boca Engineering Co. by:

| | | |
|---|---|---|
| Christopher Bowness, P.Eng., P.E. | 2026-09-23<br>Issue Date | 2027-12-31<br>Expiry Date |

CHRISTOPHER W.C. BOWNESS LICENSE No 64748 FILE 0064 STATE OF FLORIDA PROFESSIONAL ENGINEER

LICENSED PROFESSIONAL ENGINEER CHRISTOPHER W.C. BOWNESS C 90057 FILE 0064 CIVIL STATE OF CALIFORNIA

## EVALUATION REPORT TERMS

1. This report is a general evaluation of the building code section requirements as identified and applies only to the samples that were evaluated. It does not imply any endorsement or warranty, nor that the signatory Engineer is the Designer of Record of any construction project for which the information is used.
2. This Evaluation Report expires Dec. 31, 2027, open to renewal. Up to the renewal date, the report is valid until such time as the named product(s) changes, the Quality Assurance Agency changes, or provisions of the Code that relate to the product change.

## CERTIFICATION OF INDEPENDENCE

1. Boca Engineering Co., its employees and shareholders, do not have, nor do they intend to or will acquire, a financial interest in any company manufacturing or distributing products that they evaluate.
2. Boca Engineering Co. is not owned, operated, or controlled by any company manufacturing or distributing products that they evaluate.

## Contents

PRODUCT EVALUATION 4
1.0 PRODUCT DESCRIPTION 4
1.1 MATERIAL PROPERTIES 4
2.0 INSTALLATION 4
3.0 CODE SECTIONS REVIEW 4
4.0 LIMITATIONS 6
5.0 FIRE CLASSIFICATION 6
6.0 MANUFACTURING PLANTS, LABELING, AND QUALITY ASSURANCE ENTITY 6
7.0 REFERENCE TESTING AND EVALUATION DOCUMENTS 6
APPENDICES 8
LIST OF APPENDICES 8
LIST OF TABLES 9
APPENDIX A: MATERIAL PROPERTIES 10
APPENDIX B: WIND PRESSURE AND WIND SPEED TABLES USER GUIDE 12
APPENDIX C1: GENERAL NOTES AND COMPONENT DETAILS 13
APPENDIX C2: DAVINCI SLATE (DVSL) WIND PRESSURE & WIND SPEED TABLES 14
APPENDIX C3: DAVINCI SHAKE (DVSH) WIND PRESSURE & WIND SPEED TABLES 21
APPENDIX C4: SELECT SHAKE (SSH) WIND PRESSURE & WIND SPEED TABLES 28
APPENDIX C5: FANCY SHAKE (FSH) WIND PRESSURE & WIND SPEED TABLES 35
APPENDIX C6: INSPIRE CLASSIC SLATE (ICSL) WIND PRESSURE & WIND SPEED TABLES 38
APPENDIX C7: PROVINCE SLATE (PSL) WIND PRESSURE & WIND SPEED TABLES 45
APPENDIX C8: PROVINCE SHAKE (PSH) WIND PRESSURE & WIND SPEED TABLES 52
APPENDIX D: FLORIDA TO INTERNATIONAL CODE CROSS-REFERENCES 59
APPENDIX E: CALIFORNIA TO INTERNATIONAL CODE CROSS-REFERENCES 61
APPENDIX F: GENERAL INSTALLATION DRAWINGS 62

# PRODUCT EVALUATION

## 1.0 PRODUCT DESCRIPTION

Davinci roofing is manufactured by injection molding of a polymer blend in to individual slates and shakes, that serve as an exterior roof covering.

| DAVINCI PRODUCT | DESCRIPTION |
|---|---|
| **DaVinci Slate (DVSL)** | Thickness of 1/8-inch at head to 1/2-inch at butt, 18-inch long by 6, 7, 9, 10 or 12-inch wide. |
| **DaVinci Shake (DVSH)** | Thickness of 1/4-inch at head to 1/2-inch to 5/8-inch at butt, 22-inch long by 4, 6, 7, 8, or 9-inch wide. |
| **Select Shake (SSH)** | Thickness of 1/4-inch at head to 5/8-inch at butt, 22-inch long by 8, or 10-inch wide. |
| **Fancy Shake (FSH)** | Thickness of 1/4-inch at head, 1/2-inch at butt, 18-inch long by 5, 7, or 12-inch wide. Fancy Shake is also available with a "Diamond Point" or "Beaver Tail" leading edge; these "Diamond Point" and "Beaver Tail" shakes are 5-inch wide. |
| **Inspire Classic Slate (ICSL)** | Thickness of 1/4-inch, 18-inch long by 12-inch wide. |
| **Province Slate (PSL)** | Thickness of 3/8-inch at head to 5/8-inch at butt, 11-1/2-inch long by 12-inch wide. |
| **Province Shake (PSH)** | Thickness of 3/8-inch at head to 1-inch at butt, 13-1/2-inch long by 12-3/4-inch wide. |

## 1.1 MATERIAL PROPERTIES

The material properties can be found in APPENDIX A: MATERIAL PROPERTIES

## 2.0 INSTALLATION

The cladding systems as described in Section 1 shall be installed in accordance with the manufacturer's installation instructions, the 2026 Florida Building Code, and are subject to the Limitations stated within this report.

## 3.0 CODE SECTIONS REVIEW

| 2024 IBC Section | Description |
|---|---|
| **104.2.3** | **Alternative Materials, Design and Methods of Construction and Equipment**<br>There is no direct code section or referenced national standard for polymer composite roof shingles in the 2024 IBC. Appropriate standards published by organizations, i.e. ASTM International, UL Standards & Engagement, that are accredited by American National Standards Institute have been used to complete the alternative solutions testing.<br>The standard TAS 110 – Testing Requirements for Physical Properties of Roof Membranes, Insulation, Coating and Other Roofing Components, cited in 2026 Florida Building Code (FBC) covers non-rigid plastic roof tiles/shingles and provides for a prescriptive material specification pathway for compliance to the 2026 FBC. It is convincing when conducting an alternative solution study to view solutions for the application found in neighbouring building code compliance jurisdictions. South Florida is known to have a severe weathering environment imparted onto roof covering materials and compliance to codes in that region helps support this case.<br>DaVinci roof covering material has been tested to FBC standard TAS 110 for aspects of quality, strength, effectiveness and durability to meet the performance objectives of the IBC.<br>For details on compliance to 2026 FBC, see APPENDIX D: FLORIDA TO INTERNATIONAL CODE CROSS-REFERENCES. |

| 2024 IBC Section | Description |
|---|---|
| 1504.3 | **Wind Resistance of Nonballasted Roofs**<br>DaVinci Roofing systems as covered in this report follow installation instructions in accordance with IBC Section 1507 and resist design wind load pressures in accordance with IBC Section 1609. See *APPENDICES* C1 – C8 of this report. |
| 1504.3.1 | **Wind Uplift Resistance (Non-HVHZ)**<br>DaVinci Slate, DaVinci Shake, Select Shake, Fancy Shake, Inspire Classic Slate, and Province Slate roofing assemblies have been tested in accordance with UL580 and TAS 125 to determine the allowable wind uplift pressure, applying a 2:1 margin of safety to tested results. See wind pressure and wind speed tables in *APPENDICES* C1 – C8 of this report. |
| 1505 | **Fire Classification**<br>See *5.0 FIRE CLASSIFICATION* of this report. |
| 1507.8.8 | **Flashing**<br>DaVinci Roof Coverings perform as intended when installed per the manufacturer's installation instructions. Flashing shall be installed per manufacturer's installation instructions and complying with Cedar Shake and Shingle Bureau New Roof Construction Manual. |
| 2606.4 | **Burning Rate**<br>DaVinci Roofing products in this report have been tested to ASTM D635 and qualify as Class CC2. |
| 2606.4 | **Self-Ignition Temperature**<br>DaVinci Roofing products covered in this report have been tested to ASTM D1929 and have self-ignition temperatures greater than 650°F. |
| 2606.4 | **Smoke Density**<br>DaVinci Roofing products covered in this report have been tested to ASTM D2843 and have a smoke density rating less than 75. |

| 2024 IRC Section | Description |
|---|---|
| R902.1 | **Fire Classification**<br>Same as this report commentary to IBC 1505. |
| R904.3 | **Material Specifications and Physical Characteristics**<br>See APPENDIX A: MATERIAL PROPERTIES |
| R905.1 | **Roof Covering Application**<br>Allowable wind pressure values published in this report may be used with Tables R301.2.1(1) and R301.2.1(2) for roofs using an effective wind area of 10 square feet. |

## 4.0 LIMITATIONS

1. This Evaluation is for the base code requirements of the building system as addressed in this report. In some building applications, additional performance objectives may be required by the Code which must be addressed in the building design for those specific cases.
2. Design calculations, drawings, and special inspections are to be furnished for building projects by registered professionals as required by the respective jurisdictional authorities and Codes.
3. The installation details for each roof assembly evaluated for determining the maximum design wind uplift pressure are described in *APPENDICES* C1 – C8 and are limited to those prescribed conditions.
4. Materials used as components in the roof assembly shall comply with the IBC, and where necessary possess the required product approval certification and labelling.
5. The minimum roof slope in all cases is 3:12.
6. DaVinci roofing slates and shakes are for installation and fastening into wood-based solid sheathing, in accordance with this report.
7. Building framing and roof sheathing must be designed and installed in accordance with the Code for capability of supporting the imposed loads, including but not limited to positive and negative wind loads.
8. The allowable negative wind pressures for roofing shown in *APPENDICES* C1 – C8 must not exceed the design negative wind pressures determined in accordance with Chapter 16 of the IBC or Section R301.2.1.1 of the IRC.
9. The scope of evaluation does not include wind pressure due to tornado loads. For buildings prone to tornado loads, the Allowable Pressure (ASD) values listed in *APPENDICES* C1 – C8 may be used by a licensed design professional to calculate ultimate wind speed, in accordance with ASCE 7-22 Ch. 32 design methodology.

## 5.0 FIRE CLASSIFICATION

Summary of fire performance classifications found by testing to code referenced standards:
ASTM D635: Burning Rate: 0.6 in/min
ASTM D1929: Self-Ignition Temperature: 747 ◦F
ASTM D2843: Smoke Density: 8%
Where roof assembly fire classification of Class A, B, or C is required, Westlake DaVinci Roofscapes' listed assemblies by QAI Laboratories may be found at *https://qai.org/directory/davinci-roofscapes-llc/* and shall be verified for each installation by the authority having jurisdiction.

## 6.0 MANUFACTURING PLANTS, LABELING, AND QUALITY ASSURANCE ENTITY

The products evaluated in this report are surveyed at the approved manufacturing locations: Lenexa, KS, and Metamora, MI. with third-party quality assurance inspections and product certification labelling by QAI Laboratories. Labelling shall be in accordance with the requirements of the IBC, FBC, CBC, and the Accredited Quality Assurance Agency.

## 7.0 REFERENCE TESTING AND EVALUATION DOCUMENTS

| Entity | Entity Accreditation[1] | Standards | Report No. | Issue Date | Product Model(s) |
|---|---|---|---|---|---|
| **PRI** | IAS TL 189 | ASTM D635 | MMLL-010-02-03 | 2018-05-18 | **Inspire Classic Slate** |
| **Intertek** | IAS TL 274 | ASTM D635 | 104011548-004 RO | 2019-10-16 | **DaVinci series** |
| **PRI** | FBC TST5878 | ASTM D638 | DRM-156-02-01 | 2015-12-02 | **DaVinci series** |
| **PRI** | IAS TL 189 | ASTM D638 | MML-010-02-02 | 2018-11-05 | **Inspire Classic Slate** |
| **PRI** | IAS TL 189 | ASTM D1929 | MMLL-010-02-02 | 2018-03-20 | **Inspire Classic Slate** |
| **Intertek** | IAS TL 274 | ASTM D1929 | 104011548-003 RO | 2019-10-15 | **DaVinci series** |
| **PRI** | FBC TST5878 | ASTM D2843 | DRM-054-02-01 | 2015-11-16 | **DaVinci series Classic** |
| **PRI** | IAS TL 189 | ASTM D2843 | MMLL-010-02-03 | 2018-05-18 | **Inspire Classic Slate** |

| | | | | | |
|---|---|---|---|---|---|
| **PRI** | IAS TL 189 | ASTM G155 | MML-010-02-02 | 2018-11-05 | **Inspire Classic Slate** |
| **Intertek** | IAS TL 274 | ASTM G155 | 104011548-001 | 2019-08-21 | **DaVinci series** |
| **QAI** | IAS TL 220 | ASTM E84 | RJ6566F-1 | 2019-04-19 | **DaVinci series** |
| **QAI** | IAS TL 220 | ASTM D1037 | MED-1047 | 2023-09-01 | **Province Slate** |
| **Intertek** | IAS TL 274 | ASTM D1037 | 105970384COQ-014A | 2025-07-30 | **Province Shake** |
| **Intertek** | IAS TL 274 | ASTM D1037 | 103006000COQ-002E | 2018-01-01 | **DaVinci Shake, DaVinci Slate** |
| **Intertek** | IAS TL 274 | ASTM D1037 | 1060002036COQ-021B | 2025-07-29 | **Inspire Classic Slate** |
| **Intertek** | IAS TL 274 | UL 580, TAS 125 | 105228935COQ-003 | 2025-02-20 | **DaVinci Shake** |
| **Intertek** | IAS TL 274 | UL 580, TAS 125 | 105228935COQ-003A | 2025-02-20 | **DaVinci Slate** |
| **Intertek** | IAS TL 274 | UL 580, TAS 125 | 105228935COQ-003B | 2025-02-20 | **Select Shake** |
| **Intertek** | IAS TL 274 | UL 580, TAS 125 | 105228935COQ-003C | 2025-02-20 | **Province Slate** |
| **Intertek** | IAS TL 274 | UL 580, TAS 125 | 106281428COQ-002REV | 2025-11-21 | **Province Slate** |
| **Intertek** | IAS TL 274 | UL 580, TAS 125 | 105228935COQ-003D | 2025-02-20 | **Fancy Shake** |
| **Intertek** | IAS TL 274 | UL 580, TAS 125 | 105228935COQ-003E | 2025-02-20 | **Inspire Classic Slate** |
| **Intertek** | IAS TL 274 | UL 580, TAS 125 | 106281428COQ-002REV | 2025-11-21 | **Inspire Classic Slate** |
| **Intertek** | IAS TL 274 | UL 580, TAS 125 | 105970384COQ-009 | 2025-05-01 | **Province Shake** |
| **Intertek** | IAS AA-647 | Fire Classification | Spec ID: 73566 | 2026-09-23 | **Inspire Classic Slate** |
| **QAI** | FBC CER3916 | Fire Classification | B0150 | 2026-09-23 | **All** |
| **QAI** | FBC QUA7628 | Quality Assurance | B0150 | **2026-09-23** | **All** |

1. Testing, certification, evaluation, and inspection agencies referenced have been verified to be accredited by Standards Council of Canada (www.scc.ca), A2LA (www.a2la.org) or International Accreditation Service (www.iasonline.org) for the applicable scope, in good standing on the date of the evaluation, in accordance with ISO 17025 and ISO 17020 international standards for testing and inspection bodies.

# APPENDICES

## LIST OF APPENDICES

APPENDIX A: MATERIAL PROPERTIES ..... 10
APPENDIX B: WIND PRESSURE AND WIND SPEED TABLES USER GUIDE ..... 12
APPENDIX C1: GENERAL NOTES AND COMPONENT DETAILS ..... 13
APPENDIX C2: DAVINCI SLATE (DVSL) WIND PRESSURE & WIND SPEED TABLES ..... 14
APPENDIX C3: DAVINCI SHAKE (DVSH) WIND PRESSURE & WIND SPEED TABLES ..... 21
APPENDIX C4: SELECT SHAKE (SSH) WIND PRESSURE & WIND SPEED TABLES ..... 28
APPENDIX C5: FANCY SHAKE (FSH) WIND PRESSURE & WIND SPEED TABLES ..... 35
APPENDIX C6: INSPIRE CLASSIC SLATE (ICSL) WIND PRESSURE & WIND SPEED TABLES ..... 38
APPENDIX C7: PROVINCE SLATE (PSL) WIND PRESSURE & WIND SPEED TABLES ..... 45
APPENDIX C8: PROVINCE SHAKE (PSH) WIND PRESSURE & WIND SPEED TABLES ..... 52
APPENDIX D: FLORIDA TO INTERNATIONAL CODE CROSS-REFERENCES ..... 59
APPENDIX E: CALIFORNIA TO INTERNATIONAL CODE CROSS-REFERENCES ..... 61
APPENDIX F: GENERAL INSTALLATION DRAWINGS ..... 62


www.bocaengineering.com BOCA ENGINEERING CO. info@bocaengineering.com
Greater Victoria Area: (250) 477-7777 203-1001 Cloverdale Ave., Victoria BC V8X 4C9
Metro Vancouver: (604) 385-5210 1567 Brearley St., White Rock BC V4B 3M6

# LIST OF TABLES

Table A1: DaVinci Series Roofing Material Properties Except Inspire Classic ..... 10
Table A2: Inspire Classic Roofing Material Properties ..... 12

Table C1.1: General Assembly Component Details for Use with General Notes and Appendices C2 – C8 ..... 13

Table C2.1: Davinci Slate Assembly Configurations ..... 14
Table C2.2: Davinci Slate Maximum Wind Speeds of Gable Roof Cladding – 2026 FBC (Non-HVHZ); 2025 CBC; 2024 & 2021 IBC |7/16" OSB| ..... 15
Table C2.3: Davinci Slate Maximum Wind Speeds of Hip Roof Cladding – 2026 FBC (Non-HVHZ); 2025 CBC; 2024 & 2021 IBC |7/16" OSB| ..... 16
Table C2.4: Davinci Slate Maximum Wind Speeds of Gable Roof Cladding – 2026 FBC (HVHZ & Non-HVHZ); 2025 CBC; 2024 & 2021 IBC |1/2" Plywood| ..... 17
Table C2.5: Davinci Slate Maximum Wind Speeds of Hip Roof Cladding – 2026 FBC (HVHZ & Non-HVHZ); 2025 CBC; 2024 & 2021 IBC |1/2" Plywood| ..... 18
Table C2.6: Davinci Slate Maximum Wind Speeds of Gable Roof Cladding – 2026 FBC (HVHZ & Non-HVHZ); 2025 CBC; 2024 & 2021 IBC |5/8" Plywood| ..... 19
Table C2.7: Davinci Slate Maximum Wind Speeds of Hip Roof Cladding – 2026 FBC (HVHZ & Non-HVHZ); 2025 CBC; 2024 & 2021 IBC |5/8" Plywood| ..... 20

Table C3.1: Davinci Shake Assembly Configurations ..... 21
Table C3.2: Davinci Shake Maximum Wind Speeds of Gable Roof Cladding – 2026 FBC (Non-HVHZ); 2025 CBC; 2024 & 2021 IBC |7/16" OSB| ..... 22
Table C3.3: Davinci Shake Maximum Wind Speeds of Hip Roof Cladding – 2026 FBC (Non-HVHZ); 2025 CBC; 2024 & 2021 IBC |7/16" OSB| ..... 23
Table C3.4: Davinci Shake Maximum Wind Speeds of Gable Roof Cladding – 2026 FBC (HVHZ & Non-HVHZ); 2025 CBC; 2024 & 2021 IBC |1/2" Plywood| ..... 24
Table C3.5: Davinci Shake Maximum Wind Speeds of Hip Roof Cladding – 2026 FBC (HVHZ & Non-HVHZ); 2025 CBC; 2024 & 2021 IBC |1/2" Plywood| ..... 25
Table C3.6: Davinci Shake Maximum Wind Speeds of Gable Roof Cladding – 2026 FBC (HVHZ & Non-HVHZ); 2025 CBC; 2024 & 2021 IBC |5/8" Plywood| ..... 26
Table C3.7: Davinci Shake Maximum Wind Speeds of Hip Roof Cladding – 2026 FBC (HVHZ & Non-HVHZ); 2025 CBC; 2024 & 2021 IBC |5/8" Plywood| ..... 27

Table C4.1: Select Shake Assembly Configurations ..... 28
Table C4.2: Select Shake Maximum Wind Speeds of Gable Roof Cladding – 2026 FBC (Non-HVHZ); 2025 CBC; 2024 & 2021 IBC |7/16" OSB| ..... 29
Table C4.3: Select Shake Maximum Wind Speeds of Hip Roof Cladding – 2026 FBC (Non-HVHZ); 2025 CBC; 2024 & 2021 IBC |7/16" OSB| ..... 30
Table C4.4: Select Shake Maximum Wind Speeds of Gable Roof Cladding – 2026 FBC (HVHZ & Non-HVHZ); 2025 CBC; 2024 & 2021 IBC |1/2" PLYWOOD| ..... 31
Table C4.5: Select Shake Maximum Wind Speeds of Hip Roof Cladding – 2026 FBC (HVHZ & Non-HVHZ); 2025 CBC; 2024 & 2021 IBC |1/2" PLYWOOD| ..... 32
Table C4.6: Select Shake Maximum Wind Speeds of Gable Roof Cladding – 2026 FBC (HVHZ & Non-HVHZ); 2025 CBC; 2024 & 2021 IBC |5/8" PLYWOOD| ..... 33
Table C4 7: Select Shake Maximum Wind Speeds of Hip Roof Cladding – 2026 FBC (HVHZ & Non-HVHZ); 2025 CBC; 2024 & 2021 IBC |5/8" PLYWOOD| ..... 34

Table C5.1: Fancy Shake Assembly Configurations ..... 35
Table C5.2: Fancy Shake Maximum Wind Speeds of Gable Roof Cladding – 2026 FBC (Non-HVHZ); 2025 CBC; 2024 & 2021 IBC |7/16" OSB| ..... 36
Table C5.3: Fancy Shake Maximum Wind Speeds of Hip Roof Cladding – 2026 FBC (Non-HVHZ); 2025 CBC; 2024 & 2021 IBC |7/16" OSB| ..... 36
Table C5.4: Fancy Shake Maximum Wind Speeds of Gable Roof Cladding – 2026 FBC (HVHZ & Non-HVHZ); 2025 CBC; 2024 & 2021 IBC |1/2" PLYWOOD| ..... 37
Table C5.5: Fancy Shake Maximum Wind Speeds of Hip Roof Cladding – 2026 FBC (HVHZ & Non-HVHZ); 2025 CBC; 2024 & 2021 IBC |1/2" PLYWOOD| ..... 37

Table C6.1: Inspire Classic Slate Assembly Configurations ..... 38
Table C6.2: Inspire Classic Slate Maximum Wind Speeds of Gable Roof Cladding-2026 FBC (Non-HVHZ); 2025 CBC; 2024 & 2021 IBC |7/16" OSB| ..... 39
Table C6.3: Inspire Classic Slate Maximum Wind Speeds of Hip Roof Cladding - 2026 FBC (Non-HVHZ); 2025 CBC; 2024 & 2021 IBC |7/16" OSB| ..... 40
Table C6.4: Inspire Classic Slate Maximum Wind Speeds of Gable Roof Cladding-2026 FBC (HVHZ & Non-HVHZ); 2025 CBC; 2024 & 2021 IBC |1/2" PLYWOOD| ..... 41
Table C6.5: Inspire Classic Slate Maximum Wind Speeds of Hip Roof Cladding – 2026 FBC (HVHZ & Non-HVHZ); 2025 CBC; 2024 & 2021 IBC |1/2" PLYWOOD| ..... 42
Table C6.6: Inspire Classic Slate Maximum Wind Speeds of Gable Roof Cladding-2026 FBC (HVHZ & Non-HVHZ); 2025 CBC; 2024 & 2021 IBC |5/8" PLYWOOD| ..... 43
Table C6.7: Inspire Classic Slate Maximum Wind Speeds of Hip Roof Cladding–2026 FBC (HVHZ & Non-HVHZ); 2025 CBC; 2024 & 2021 IBC |5/8" PLYWOOD| ..... 44

Table C7.1: Province Slate Assembly Configurations ..... 45
Table C7.2: Province Slate Maximum Wind Speeds of Gable Roof Cladding – 2026 FBC (Non-HVHZ); 2025 CBC; 2024 & 2021 IBC |7/16" OSB| ..... 46
Table C7.3: Province Slate Maximum Wind Speeds of Hip Roof Cladding – 2026 FBC (Non-HVHZ); 2025 CBC; 2024 & 2021 IBC |7/16" OSB| ..... 47
Table C7.4: Province Slate Maximum Wind Speeds of Gable Roof Cladding – 2026 FBC (HVHZ & Non-HVHZ); 2025 CBC; 2024 & 2021 IBC |1/2" PLYWOOD| ..... 48
Table C7.5: Province Slate Maximum Wind Speeds of Hip Roof Cladding – 2026 FBC (HVHZ & Non-HVHZ); 2025 CBC; 2024 & 2021 IBC |1/2" PLYWOOD| ..... 49
Table C7.6: Province Slate Maximum Wind Speeds of Gable Roof Cladding – 2026 FBC (HVHZ & Non-HVHZ); 2025 CBC; 2024 & 2021 IBC |5/8" PLYWOOD| ..... 50
Table C7.7: Province Slate Maximum Wind Speeds of Hip Roof Cladding – 2026 FBC (HVHZ & Non-HVHZ); 2025 CBC; 2024 & 2021 IBC |5/8" PLYWOOD| ..... 51

Table C8. 1: Province Shake Assembly Configurations ..... 52
Table C8. 2: Province Shake Maximum Wind Speeds of Gable Roof Cladding – 2026 FBC (Non-HVHZ); 2025 CBC; 2024 & 2021 IBC |7/16" OSB| ..... 53
Table C8. 3: Province Slate Maximum Wind Speeds of Hip Roof Cladding – 2026 FBC (Non-HVHZ); 2025 CBC; 2024 & 2021 IBC |7/16" OSB| ..... 54
Table C8. 4: Province Shake Maximum Wind Speeds of Gable Roof Cladding – 2026 FBC (HVHZ & Non-HVHZ); 2025 CBC; 2024 & 2021 IBC |1/2" PLYWOOD| ..... 55
Table C8. 5: Province Slate Maximum Wind Speeds of Hip Roof Cladding – 2026 FBC (HVHZ & Non-HVHZ); 2025 CBC; 2024 & 2021 IBC |1/2" PLYWOOD| ..... 56
Table C8. 6: Province Shake Maximum Wind Speeds of Gable Roof Cladding – 2026 FBC (HVHZ & Non-HVHZ); 2025 CBC; 2024 & 2021 IBC |5/8" PLYWOOD| ..... 57
Table C8. 7: Province Slate Maximum Wind Speeds of Hip Roof Cladding – 2026 FBC (HVHZ & Non-HVHZ); 2025 CBC; 2024 & 2021 IBC |5/8" PLYWOOD| ..... 58

Table D1: 2026 FBC to 2024/2021 IBC Cross-referenced Sections ..... 59
Table D2: 2026 FBC-R to 2024/2021 IRC Cross-referenced Sections ..... 59

Table E1: 2025 CBC to 2024/2021 IBC Cross-referenced Sections ..... 61
Table E2: 2025 CRC to 2024/2021 IRC Cross-referenced Sections ..... 61


www.bocaengineering.com BOCA ENGINEERING CO. info@bocaengineering.com
Greater Victoria Area: (250) 477-7777 203-1001 Cloverdale Ave., Victoria BC V8X 4C9
Metro Vancouver: (604) 385-5210 1567 Brearley St., White Rock BC V4B 3M6

## APPENDIX A: MATERIAL PROPERTIES

**Table A1: DaVinci Series Roofing Material Properties**

| Property | Standard | Result | Requirement | | Compliance |
|---|---|---|---|---|---|
| **Fire/Flammability Material Properties** | | | | | |
| Spontaneous Ignition Temperature (◦F) | ASTM D1929 | 747 - 785 ◦F | ≥ | 650 | Pass |
| Linear Burn Rate (in/min) | ASTM D635 | 0.6 - 0.7 in/min | ≤ | 2.5 | Pass |
| Average Smoke Density (%) | ASTM D2843 | 8 - 16% | ≤ | 75 | Pass |
| Smoke Developed Index | ASTM E84 | 400 | ≤ | 450 | Pass |
| **General Material Properties** | | | | | |
| Tensile Strength (psi) | ASTM D638 | 1115 - 1774 psi | Report Value | | Pass |
| Tensile Strength After Heat Aging for 60 days at 176 ◦F Temperature (% of As Received) | ASTM D638 | 99 % | ≥ | 80[2] | Pass |
| Tensile Strength after 4500-hrs of Accelerated Weathering (% of As Received) | ASTM G155<br>ASTM D638 | 94 % | ≥ | 90[2] | Pass |
| Flexural Strength after 5000-hrs of Accelerated Weathering (% of As Received) | ASTM G155<br>ASTM D790 | 98 % | ≥ | 90[2] | Pass |
| **Davinci Slate** Nail Pull-Through (lb) with 3/8-inch nail head | ASTM D1037 | 120 lb | Report Value | | Pass |
| **Davinci Shake** Nail Pull-Through (lb) with 3/8-inch nail head | ASTM D1037 | 159 lb | Report Value | | Pass |
| **Select Shake** Nail Pull-Through (lb) with 3/8-inch nail head | ASTM D1037 | 159 lb | Report Value | | Pass |
| **Fancy Shake** Nail Pull-Through (lb) with 3/8-inch nail head | ASTM D1037 | 159 lb | Report Value | | Pass |
| **Province Slate** Nail Pull-Through (lb) with 3/8-inch nail head | ASTM D1037 | 201 lb | Report Value | | Pass |
| **Province Shake** Nail Pull-Through (lb) with 3/8-inch nail head | ASTM D1037 | 226 lb | Report Value | | Pass |
| **Roof Assembly Tests, Regional Codes[1]** | | | | | |
| Florida High Velocity Hurricane Zone (HVHZ) Maximum Uplift Resistance (psf) | TAS 125 | Uplift design pressure value (ASD) dependent on assembly details and installation conditions | | | |
| Florida High Velocity Hurricane Zone (HVHZ) Wind and Wind Driven Rain Resistance (mph) | TAS 100 | No shingle displacement or water infiltration on airflow velocity dependent on assembly details and installation conditions | | | |
| **Roof Assembly Tests, Performance Values[1]** | | | | | |
| Wind Uplift Resistance (psf) | UL 580 | Allowable (ASD) values dependent on assembly details and installation conditions | | | |
| Wind Speed Resistance (mph) | ASCE 7-22 | $V_{ULT}$ at heights of 15 – 60 ft dependent on assembly details and installation conditions | | | |
| Fire Classification | ASTM E108 | Class A, B, or C dependent on assembly details and installation conditions | | | |
| Impact Resistance | UL 2218 | Class 4 | | | |

1. Roof assembly tests results are dependent on installation components and environmental conditions consistent with tested details. See Davinci's document library of Engineering and Certifications reports for further details.
2. Typical acceptable % retention of strength after aging values.


www.bocaengineering.com BOCA ENGINEERING CO. info@bocaengineering.com
Greater Victoria Area: (250) 477-7777 203-1001 Cloverdale Ave., Victoria BC V8X 4C9
Metro Vancouver: (604) 385-5210 1567 Brearley St., White Rock BC V4B 3M6

**Table A 2: Inspire Classic Roofing Material Properties**

| Property | Standard | Result | Requirement | | Compliance |
|---|---|---|---|---|---|
| **Fire/Flammability Material Properties** | | | | | |
| Spontaneous Ignition Temperature (◦F) | ASTM D1929 | 785 ◦F | ≥ | 650 | Pass |
| Linear Burn Rate (in/min) | ASTM D635 | 0.7 in/min | ≤ | 2.5 | Pass |
| Average Smoke Density (%) | ASTM D2843 | 15.6% | ≤ | 75 | Pass |
| **General Material Properties** | | | | | |
| Tensile Strength (psi) | ASTM D638 | 1774 psi | Report Value | | Pass |
| Tensile Strength after 4500-hrs of Accelerated Weathering (% of As Received) | ASTM G155<br>ASTM D638 | 100% | ≥ | 90[2] | Pass |
| Nail Pull-Through (lb) with 3/8-inch nail head | ASTM D1037 | 177 lb | Report Value | | Pass |
| **Roof Assembly Tests, Regional Codes[1]** | | | | | |
| Florida High Velocity Hurricane Zone (HVHZ) Maximum Uplift Resistance (psf) | TAS 125 | Uplift design pressure value (ASD) dependent on assembly details and installation conditions | | | |
| Florida High Velocity Hurricane Zone (HVHZ) Wind and Wind Driven Rain Resistance (mph) | TAS 100 | No shingle displacement or water infiltration on airflow velocity dependent on assembly details and installation conditions | | | |
| **Roof Assembly Tests, Performance Values[1]** | | | | | |
| Wind Uplift Resistance (psf) | UL 580 | Allowable (ASD) values dependent on assembly details and installation conditions | | | |
| Wind Speed Resistance (mph) | ASCE 7-22 | $V_{ULT}$ at heights of 15 – 60 ft dependent on assembly details and installation conditions | | | |
| Fire Classification | ASTM E108 | Class A, B, or C dependent on assembly details and installation conditions | | | |
| Impact Resistance | UL 2218 | Class 4 | | | |

3. Roof assembly tests results are dependent on installation components and environmental conditions consistent with tested details. See Davinci's document library of Engineering and Certifications reports for further details.
4. Typical acceptable % retention of strength after aging values.

## APPENDIX B: WIND PRESSURE AND WIND SPEED TABLES USER GUIDE

DaVinci Roofing wind uplift pressures and wind speed conversion tables have been developed to assist users in determining appropriate installation details for DaVinci products, roof construction components, building dimension plans, and site and environmental conditions.

Wind speed conversion tables have been prepared following the design methodology of ASCE 7-22, Ch. 30.3, for low-rise enclosed buildings with maximum height of 60 ft, with topographic and elevation factors set to unity. These settings are typical of many installations, and consistent with the prescriptive approach used in FBC-R Table R301.2(2) and IRC Table R301.2.1(1). All conditions and assembly details must be consistent with Tables in Appendices C1-C8 to be considered valid. If the actual site, building dimension or climatic conditions (including the given variables) differ from those prescribed, the allowable pressure values in Appendices C may be used to calculate adjusted wind speed limits. Refer to Figure B-1 for the determination of roof zones, in accordance with ASCE 7-22.

The wind speed conversion tables introduce a Roof Overhang Reduction Factor for gable and hip roofs. The Roof Overhang Reduction Factor is a ratio of the maximum wind speed at roof overhang locations, divided by the calculated maximum wind speed at roof areas with no overhang, within the respective roof zones. The roof overhang wind speed is evaluated per design methodology defined in ASCE 7-22, Ch. 30.7, which applies an uplift pressure due to an adjacent wall in addition to the external and internal roof wind pressure. The concluding Roof Overhang Reduction Factor within the tables in Appendices C1-C8 is taken as the value which produces the most critical maximum wind speed for overhang gable and hip roofs within the respective zones.

Although the 2021 IBC references ASCE 7-16, the outcomes of the calculations between ASCE 7-22 and ASCE 7-16 are identical in nearly all applicable cases. Where not identical, it has been determined that the results are similar enough that the outcomes of the calculations performed to produce the wind speed conversion tables comply with the relevant sections of ASCE 7-16.

For building heights over 60 ft, the Allowable Pressure (ASD) values listed in the wind uplift tables may be used by a licensed design professional to calculate ultimate wind speed and/or allowable height, for the given Davinci product installation detail and building project conditions.

At any building height, when the Allowable Pressure (ASD) has been pre-determined by the designer or building official, the user only needs to check that the installation detail is shown as capable of that pressure or greater.

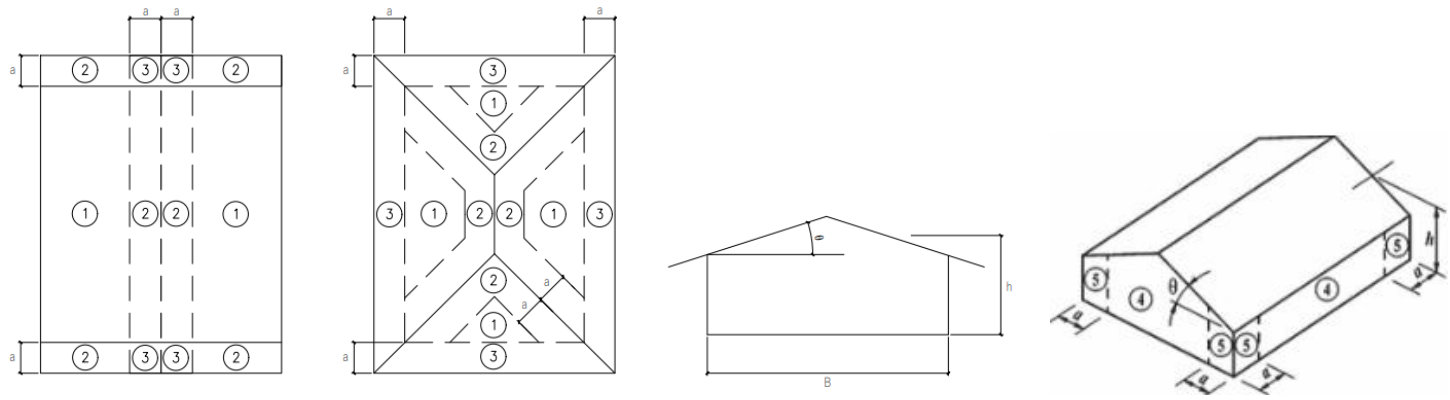


a = 10% of least horizontal dimension or 0.4*h*, whichever is smaller, but not less than either 4% of least horizontal dimension or 3 ft (0.9 m). If an overhang exists, the edge distance shall be measured from the outside edge of the overhang, The horizontal dimensions used to compute the edge distance shall not include any overhang distances.
h = Mean roof height, in ft (m), except that eave height shall be used for θ ≤ 10°.
B = Horizontal dimension of building measured normal to wind direction, in ft (m).
θ = Angle of plane of roof from horizontal, in degrees.

***Figure B-1:*** *Wind Pressure Diagrams as Represented in ASCE 7-22 for use in conjunction with tables in appendices C.*

# APPENDIX C1: GENERAL NOTES AND COMPONENT DETAILS

## General Notes for APPENDIX C2 – APPENDIX C8

1. DaVinci System No. details as provided.
2. Plywood Sheathing: Min. 0.42 SG, Exposure 1, complying with NIST DOC PS 2. Wood sheathing may be substituted with a thicker profile or solid lumber of up to a nominal 1 inch.
3. OSB Sheathing: Exposure 1, complying with NIST DOC PS 2. Wood sheathing may be substituted with a thicker profile or solid lumber of up to a nominal 1 inch.
4. All fasteners are to be corrosion-resistant. Nails are 11ga 1.75-inch galvanized ring-shank roofing nail, and must comply with ASTM F1667. Screws are #10 x 2-inch wafer or washer head galvanized screws, and must comply with ASME B18.6.1.
5. Allowable pressure (psf) (ASD) represents tested assembly ultimate pressure divided by a safety factor of 2.
6. To convert to Factored Design Resistance Pressure (psf) (LRFD), multiply Allowable Pressure (psf) (ASD) by 1.67.
7. Wind exposure categories as defined in ASCE 7-22, Section 26.7.
8. Per Figure B-1 of this report, Zone 2/3 is the corner and edge locations and Zone 1 is the field of the roof. Zone numbers have been simplified for table use.
9. Wind speed conversion corresponds to the maximum Zone 2/3 or Zone 1 pressure with an effective area of 10 $ft^2$. Table wind speeds are only valid under the design conditions stated. For other site conditions and/or building dimensions, designers can use the published Allowable Pressure (psf) (ASD) to determine wind speeds with FBC-R Table R301.2(2), IRC Table R301.2.1(1) or calculations to FBC/CBC/IBC Ch 16.
10. NA indicates that the installation condition is not acceptable within the design limits of the table.
11. Roof Overhang Reduction Factor is to be applied to the Maximum Wind Speed ($V_{ult}$) for roof areas above overhangs. The reduction accounts for the adjacent wall's positive external pressure in addition to the total roof uplift pressure, in accordance with ASCE 7-22, Section 30.7.
12. Table limiting heights and wind velocity values are for low-rise buildings of maximum 60 ft height, developed in accordance with ASCE 7-22. Design input values: $GC_p$ = ASCE 7-22 Figs 30.3-2(A-I), $GC_{pi}$ = 0.18, $K_{zt}$ = 1, $K_d$ = 0.85, $K_e$ = 1, $I_w$ = 1.0.
13. Interpolation is not permitted. For heights in between those listed, use the next highest height column.
14. Inspire Classic Slate: All nails within reinforcing target; For 4 nails per shingle assemblies, install 2 nails per nail marking.
15. The structural framing and sheathing shall be designed and anchored to provide lateral bracing and properly transfer all loads to the structure. Framing design and installation is the responsibility of the engineer or architect of record for the project of installation.

**Table C1. 1: General Assembly Component Details for Use with General Notes and Appendices C2 – C8[a,b]**

| **ROOFING SHINGLE:** | **ALL DAVINCI ROOFSCAPES** |
|---|---|
| **MAX SHINGLE EXPOSURE:** | Specifies the exposure length of the shingle in inches as the maximum course-to-course spacing. |
| **DECK SHEATHING:** | Min. 15/32-inch plywood or wood plank, or 7/16 OSB, as specified. |
| **SHINGLE FASTENER:** | Specifies the number and type of fasteners per individual shingle. |
| **ALLOWABLE PRESSURE:** | Maximum ASD design pressure in pounds-per-square-foot (psf) for wind uplift. |
| **EXPOSURE CATEGORY:** | Terrain wind exposure category as defined in ASCE 7-22, section 26.7. |
| **SLOPE RANGE:** | Slope is shown in Vertical:Horizontal (e.g. 3:12 = 3-inch rise to 12-inch run). |
| **WIND VELOCITY $V_{ult}$:** | Maximum wind velocity (mph) for the respective installation condition. |
| **DECK ATTACHMENT:** | In accordance with applicable Code, designed to support the maximum design pressure. |
| **UNDERLAYMENT:** | **IBC and FBC Non-HVHZ Applications**<br>Minimum underlayment shall be in accordance with FBC/IBC 1507.1.1 or any Approved underlayment having current Product Approval. Per manufacturer's instructions, for roof slopes less than 4:12, an approved self-adhering underlayment is to be used in all applications.<br>**FBC HVHZ Applications**<br>For slopes of 3:12 – 4:12, one layer of ASTM D1970 compliant self-adhering underlayment applied over the entire deck surface.<br>For slopes greater than 4:12, one layer of ASTM D226 Type 2 underlayment, overlapped 4-inch horizontally and 6-inch at end laps, fastened with 1¼-inch ring-shank nails with 1⅝-inch tin caps at 12-inch o/c in field and 6-inch o/c at overlaps. |
| **VALLEYS:** | A full-width sheet of Approved ASTM D1970 self-adhering underlayment centered in the valley, followed by minimum 16-inch wide 28-gauge valley metal secured with roofing nails spaced at 4-inch o.c., 1-inch from the edge of the metal. An 18-inch strip of ASTM D1970 self-adhered membrane is placed over the edge of the valley metal. |
| **STARTER:** | Each DaVinci Slate Starter to be installed extending approximately 1-inch over eaves and ¾-inch over rakes and with a 3/8-inch gap between starter shingles. (Note: If using Style D or Style F drip edge, the starter shingle can be allowed to overhang less if it is appropriate for the gutter system.) Each starter shingle to be nailed approximately 6-inch up from the butt edge and ¾-inch from each side with 11-gage nails as specified. In high wind areas (greater than 110 mph in accordance with Figures in IBC 1609), an additional nail to be placed in an area below the 8-inch line so that it will not be exposed through the shingles on the first course. |
| **SLATES AND SHAKES NAIL FASTENING** | Galvanized, stainless steel, aluminum or copper roofing nails, minimum 11-gage [0.12 inch] ring-shank with a minimum 3/8-inch-diameter (9.5 mm) head, of a length to penetrate through the roofing materials and a minimum of 3/4 inch (19.1 mm) into the roof sheathing, or galvanized 2-inch #10 screws with a minimum 3/8-inch-diameter (9.5 mm) wafer or washer head. Where the roof sheathing is less than 3/4 inch (19.1 mm) thick, the nails shall penetrate through the sheathing. Nail and screw fasteners shall comply with ASTM F1667 and ASME B18.6.1, respectively. |

a. Additional assembly-specific component details are provided in *APPENDICES C2 – C8*. Assembly-specific details govern if conflicting with those in Table C1. 1
b. HVHZ assemblies may also be used in Non-HVHZ regions following the same details.

## APPENDIX C2: DAVINCI SLATE (DVSL) WIND PRESSURE & WIND SPEED TABLES

**Table C2. 1: Davinci Slate Assembly Configurations**

| System No.[1] | Min Sheathing[2,3] | Max Shingle Exposure | Shingle Fasteners[4] | Allowable Pressure[5,6] (psf)(ASD) |
|---|---|---|---|---|
| **DVSL-1** | 7/16" OSB | 6" | 2 nails per shingle, 11ga 1.75-inch galvanized ring-shank roofing nails | 93 |
| **DVSL-2** | 7/16" OSB | 6" | 4 nails per shingle, 11ga 1.75-inch galvanized ring-shank roofing nails | 154 |
| **DVSL-3** | 7/16" OSB | 8" | 2 nails per shingle, 11ga 1.75-inch galvanized ring-shank roofing nails | 65 |
| **DVSL-4** | 7/16" OSB | 8" | 4 nails per shingle, 11ga 1.75-inch galvanized ring-shank roofing nails | 127 |
| **DVSL-5** | 7/16" OSB | 6-8" | 2 screws per shingle, #10 2-inch galvanized wafer head screws | 127 |
| **DVSL-6** | 7/16" OSB | 6-8" | 4 screws per shingle, #10 2-inch galvanized wafer head screws | 178 |
| **DVSL-7** | 1/2" Plywood | 6" | 2 nails per shingle, 11ga 1.75-inch galvanized ring-shank roofing nails | 124 |
| **DVSL-8** | 1/2" Plywood | 6" | 4 nails per shingle, 11ga 1.75-inch galvanized ring-shank roofing nails | 206 |
| **DVSL-9** | 1/2" Plywood | 8" | 2 nails per shingle, 11ga 1.75-inch galvanized ring-shank roofing nails | 87 |
| **DVSL-10** | 1/2" Plywood | 8" | 4 nails per shingle, 11ga 1.75-inch galvanized ring-shank roofing nails | 170 |
| **DVSL-11** | 1/2" Plywood | 6-8" | 2 screws per shingle, #10 2-inch galvanized wafer head screws | 170 |
| **DVSL-12** | 1/2" Plywood | 6-8" | 4 screws per shingle, #10 2-inch galvanized wafer head screws | 237 |
| **DVSL-13** | 5/8" Plywood | 6" | 2 nails per shingle, 11ga 1.75-inch galvanized ring-shank roofing nails | 191 |
| **DVSL-14** | 5/8" Plywood | 6" | 4 nails per shingle, 11ga 1.75-inch galvanized ring-shank roofing nails | 249 |
| **DVSL-15** | 5/8" Plywood | 8" | 2 nails per shingle, 11ga 1.75-inch galvanized ring-shank roofing nails | 104 |
| **DVSL-16** | 5/8" Plywood | 8" | 4 nails per shingle, 11ga 1.75-inch galvanized ring-shank roofing nails | 226 |
| **DVSL-17** | 5/8" Plywood | 6-8" | 2 screws per shingle, #10 2-inch galvanized wafer head screws | 170 |
| **DVSL-18** | 5/8" Plywood | 6-8" | 4 screws per shingle, #10 2-inch galvanized wafer head screws | 237 |

**See *General Notes for APPENDIX C2 – APPENDIX C8* on page *13* for referenced superscript table notes.**

Allowable pressure (ASD) design values for max 8" exposure can be used for shingle exposures less than 8".

In accordance with the 2026 Florida Building Code (FBC), minimum 19/32-inch (5/8") plywood or wood planks must be installed for new roof deck construction in HVHZ regions.

Unless noted otherwise, the published allowable pressure (ASD) values apply to HVHZ and Non-HVHZ applications, and include a safety factor of 2.

**<WIND SPEED TABLES BEGIN NEXT PAGE>**

**Table C2. 2: Davinci Slate Maximum Wind Speeds of Gable Roof Cladding – 2026 FBC (Non-HVHZ); 2025 CBC; 2024 & 2021 IBC |7/16" OSB|**

| System No.[1] | Max Shingle Exposure | Shingle Fastener[4] | Allowable Pressure (psf) (ASD)[5,6] | Exposure Category[7] | ZONE 2/3 (CORNER/EDGE)[8] Maximum Wind Speed $V_{ult}$ (mph)[9,10,11] Building Height (ft)[12,13] | | | | | | | ZONE 1 (FIELD)[8] Maximum Wind Speed $V_{ult}$ (mph)[9,10,11] Building Height (ft)[12,13] | | | | | | |
|---|---|---|---|---|---|---|---|---|---|---|---|---|---|---|---|---|---|---|
| | | | | | 15 | 20 | 25 | 30 | 40 | 50 | 60 | 15 | 20 | 25 | 30 | 40 | 50 | 60 |
| **GABLE ROOFS (SLOPE 3:12 – 4.4:12)** | | | | | | | | | | | | | | | | | | |
| DVSL-1 | 6" | 2 nails | 93 | B | 182 | 174 | 169 | 164 | 160 | 154 | 151 | 210 | 210 | 210 | 210 | 210 | 203 | 198 |
| | | | | C | 149 | 145 | 142 | 139 | 135 | 131 | 129 | 196 | 191 | 186 | 183 | 177 | 173 | 170 |
| | | | | D | 135 | 132 | 130 | 127 | 124 | 122 | 120 | 178 | 174 | 171 | 168 | 164 | 160 | 158 |
| DVSL-2 | 6" | 4 nails | 154 | B | 210 | 210 | 210 | 210 | 205 | 199 | 194 | 210 | 210 | 210 | 210 | 210 | 210 | 210 |
| | | | | C | 192 | 186 | 182 | 178 | 173 | 169 | 166 | 210 | 210 | 210 | 210 | 210 | 210 | 210 |
| | | | | D | 174 | 170 | 167 | 164 | 160 | 157 | 154 | 210 | 210 | 210 | 210 | 210 | 206 | 203 |
| DVSL-3 | 8" | 2 nails | 65 | B | 152 | 146 | 141 | 137 | 133 | 129 | 126 | 200 | 192 | 186 | 181 | 176 | 170 | 166 |
| | | | | C | 124 | 121 | 118 | 116 | 113 | 110 | 108 | 164 | 159 | 156 | 153 | 148 | 145 | 142 |
| | | | | D | 113 | 110 | 108 | 107 | NA | NA | NA | 149 | 145 | 143 | 140 | 137 | 134 | 132 |
| DVSL-4 | 8" | 4 nails | 127 | B | 210 | 204 | 197 | 192 | 186 | 180 | 176 | 210 | 210 | 210 | 210 | 210 | 210 | 210 |
| | | | | C | 174 | 169 | 165 | 162 | 157 | 154 | 151 | 210 | 210 | 210 | 210 | 207 | 202 | 199 |
| | | | | D | 158 | 154 | 152 | 149 | 145 | 142 | 140 | 208 | 203 | 200 | 196 | 191 | 187 | 185 |
| DVSL-5 | 6-8" | 2 screws | 127 | B | 210 | 204 | 197 | 192 | 186 | 180 | 176 | 210 | 210 | 210 | 210 | 210 | 210 | 210 |
| | | | | C | 174 | 169 | 165 | 162 | 157 | 154 | 151 | 210 | 210 | 210 | 210 | 207 | 202 | 199 |
| | | | | D | 158 | 154 | 152 | 149 | 145 | 142 | 140 | 208 | 203 | 200 | 196 | 191 | 187 | 185 |
| DVSL-6 | 6-8" | 4 screws | 178 | B | 210 | 210 | 210 | 210 | 210 | 210 | 208 | 210 | 210 | 210 | 210 | 210 | 210 | 210 |
| | | | | C | 206 | 200 | 196 | 192 | 186 | 182 | 179 | 210 | 210 | 210 | 210 | 210 | 210 | 210 |
| | | | | D | 187 | 183 | 179 | 176 | 172 | 169 | 166 | 210 | 210 | 210 | 210 | 210 | 210 | 210 |
| **GABLE ROOFS (SLOPE 4.5:12 – 6.1:12)** | | | | | | | | | | | | | | | | | | |
| DVSL-1 | 6" | 2 nails | 93 | B | 198 | 190 | 184 | 179 | 174 | 168 | 164 | 210 | 210 | 210 | 210 | 210 | 210 | 210 |
| | | | | C | 162 | 158 | 154 | 151 | 147 | 143 | 141 | 210 | 210 | 210 | 208 | 202 | 197 | 194 |
| | | | | D | 147 | 144 | 141 | 139 | 136 | 133 | 131 | 203 | 198 | 195 | 191 | 186 | 183 | 180 |
| DVSL-2 | 6" | 4 nails | 154 | B | 210 | 210 | 210 | 210 | 210 | 210 | 210 | 210 | 210 | 210 | 210 | 210 | 210 | 210 |
| | | | | C | 209 | 203 | 199 | 195 | 189 | 184 | 181 | 210 | 210 | 210 | 210 | 210 | 210 | 210 |
| | | | | D | 190 | 185 | 182 | 179 | 174 | 171 | 168 | 210 | 210 | 210 | 210 | 210 | 210 | 210 |
| DVSL-3 | 8" | 2 nails | 65 | B | 166 | 159 | 154 | 150 | 145 | 141 | 137 | 210 | 210 | 210 | 206 | 200 | 194 | 189 |
| | | | | C | 136 | 132 | 129 | 126 | 123 | 120 | 118 | 187 | 181 | 178 | 174 | 169 | 165 | 162 |
| | | | | D | 123 | 120 | 118 | 116 | 113 | 111 | 109 | 170 | 166 | 163 | 160 | 156 | 153 | 150 |
| DVSL-4 | 8" | 4 nails | 127 | B | 210 | 210 | 210 | 209 | 203 | 197 | 192 | 210 | 210 | 210 | 210 | 210 | 210 | 210 |
| | | | | C | 190 | 184 | 180 | 177 | 172 | 168 | 165 | 210 | 210 | 210 | 210 | 210 | 210 | 210 |
| | | | | D | 172 | 168 | 165 | 162 | 158 | 155 | 153 | 210 | 210 | 210 | 210 | 210 | 210 | 210 |
| DVSL-5 | 6-8" | 2 screws | 127 | B | 210 | 210 | 210 | 209 | 203 | 197 | 192 | 210 | 210 | 210 | 210 | 210 | 210 | 210 |
| | | | | C | 190 | 184 | 180 | 177 | 172 | 168 | 165 | 210 | 210 | 210 | 210 | 210 | 210 | 210 |
| | | | | D | 172 | 168 | 165 | 162 | 158 | 155 | 153 | 210 | 210 | 210 | 210 | 210 | 210 | 210 |
| DVSL-6 | 6-8" | 4 screws | 178 | B | 210 | 210 | 210 | 210 | 210 | 210 | 210 | 210 | 210 | 210 | 210 | 210 | 210 | 210 |
| | | | | C | 210 | 210 | 210 | 209 | 203 | 198 | 195 | 210 | 210 | 210 | 210 | 210 | 210 | 210 |
| | | | | D | 204 | 199 | 196 | 192 | 187 | 184 | 181 | 210 | 210 | 210 | 210 | 210 | 210 | 210 |
| **GABLE ROOFS (SLOPE 6.2:12 – 12:12)** | | | | | | | | | | | | | | | | | | |
| DVSL-1 | 6" | 2 nails | 93 | B | 210 | 207 | 201 | 195 | 190 | 183 | 179 | 210 | 210 | 210 | 210 | 210 | 210 | 208 |
| | | | | C | 177 | 172 | 168 | 165 | 160 | 156 | 153 | 206 | 200 | 196 | 192 | 186 | 182 | 178 |
| | | | | D | 161 | 157 | 154 | 151 | 148 | 145 | 142 | 187 | 183 | 179 | 176 | 172 | 168 | 166 |
| DVSL-2 | 6" | 4 nails | 154 | B | 210 | 210 | 210 | 210 | 210 | 210 | 210 | 210 | 210 | 210 | 210 | 210 | 210 | 210 |
| | | | | C | 210 | 210 | 210 | 210 | 206 | 201 | 197 | 210 | 210 | 210 | 210 | 210 | 210 | 210 |
| | | | | D | 207 | 202 | 198 | 195 | 190 | 186 | 183 | 210 | 210 | 210 | 210 | 210 | 210 | 210 |
| DVSL-3 | 8" | 2 nails | 65 | B | 181 | 173 | 168 | 163 | 158 | 153 | 150 | 210 | 201 | 195 | 190 | 184 | 178 | 174 |
| | | | | C | 148 | 144 | 141 | 138 | 134 | 131 | 128 | 172 | 167 | 164 | 160 | 155 | 152 | 149 |
| | | | | D | 134 | 131 | 129 | 127 | 123 | 121 | 119 | 156 | 153 | 150 | 147 | 144 | 141 | 139 |
| DVSL-4 | 8" | 4 nails | 127 | B | 210 | 210 | 210 | 210 | 210 | 210 | 209 | 210 | 210 | 210 | 210 | 210 | 210 | 210 |
| | | | | C | 207 | 201 | 197 | 192 | 187 | 182 | 179 | 210 | 210 | 210 | 210 | 210 | 210 | 209 |
| | | | | D | 188 | 183 | 180 | 177 | 172 | 169 | 166 | 210 | 210 | 209 | 206 | 201 | 197 | 194 |
| DVSL-5 | 6-8" | 2 screws | 127 | B | 210 | 210 | 210 | 210 | 210 | 210 | 209 | 210 | 210 | 210 | 210 | 210 | 210 | 210 |
| | | | | C | 207 | 201 | 197 | 192 | 187 | 182 | 179 | 210 | 210 | 210 | 210 | 210 | 210 | 209 |
| | | | | D | 188 | 183 | 180 | 177 | 172 | 169 | 166 | 210 | 210 | 209 | 206 | 201 | 197 | 194 |
| DVSL-6 | 6-8" | 4 screws | 178 | B | 210 | 210 | 210 | 210 | 210 | 210 | 210 | 210 | 210 | 210 | 210 | 210 | 210 | 210 |
| | | | | C | 210 | 210 | 210 | 210 | 210 | 210 | 210 | 210 | 210 | 210 | 210 | 210 | 210 | 210 |
| | | | | D | 210 | 210 | 210 | 209 | 204 | 200 | 197 | 210 | 210 | 210 | 210 | 210 | 210 | 210 |
| ROOF OVERHANG REDUCTION FACTOR[11] | | | | | 0.85 | | | | | | | 0.79 | | | | | | |

**See *Table C2. 1* on page 14 for assembly details, and *General Notes for APPENDIX C2* – APPENDIX C8 on page *13* for referenced superscript table notes.**


www.bocaengineering.com BOCA ENGINEERING CO. info@bocaengineering.com
Greater Victoria Area: (250) 477-7777 203-1001 Cloverdale Ave., Victoria BC V8X 4C9
Metro Vancouver: (604) 385-5210 1567 Brearley St., White Rock BC V4B 3M6

**Table C2. 3: Davinci Slate Maximum Wind Speeds of Hip Roof Cladding – 2026 FBC (Non-HVHZ); 2025 CBC; 2024 & 2021 IBC |7/16" OSB|**

| System No.[1] | Max Shingle Exposure | Shingle Fastener[4] | Allowable Pressure (psf) (ASD)[5,6] | Exposure Category[7] | ZONE 2/3 (CORNER/EDGE)[8] Maximum Wind Speed $V_{ult}$ (mph)[9,10,11] Building Height (ft)[12,13] | | | | | | | ZONE 1 (FIELD)[8] Maximum Wind Speed $V_{ult}$ (mph)[9,10,11] Building Height (ft)[12,13] | | | | | | |
|---|---|---|---|---|---|---|---|---|---|---|---|---|---|---|---|---|---|---|
| | | | | | 15 | 20 | 25 | 30 | 40 | 50 | 60 | 15 | 20 | 25 | 30 | 40 | 50 | 60 |
| **HIP ROOFS (SLOPE 3:12 – 4.4:12)** | | | | | | | | | | | | | | | | | | |
| DVSL-1 | 6" | 2 nails | 93 | B | 210 | 203 | 197 | 191 | 186 | 180 | 176 | 210 | 210 | 210 | 210 | 210 | 210 | 208 |
| | | | | C | 174 | 169 | 165 | 162 | 157 | 153 | 151 | 206 | 200 | 196 | 192 | 186 | 182 | 178 |
| | | | | D | 158 | 154 | 151 | 149 | 145 | 142 | 140 | 187 | 183 | 179 | 176 | 172 | 168 | 166 |
| DVSL-2 | 6" | 4 nails | 154 | B | 210 | 210 | 210 | 210 | 210 | 210 | 210 | 210 | 210 | 210 | 210 | 210 | 210 | 210 |
| | | | | C | 210 | 210 | 210 | 208 | 202 | 197 | 194 | 210 | 210 | 210 | 210 | 210 | 210 | 210 |
| | | | | D | 203 | 198 | 195 | 191 | 186 | 183 | 180 | 210 | 210 | 210 | 210 | 210 | 210 | 210 |
| DVSL-3 | 8" | 2 nails | 65 | B | 177 | 170 | 165 | 160 | 156 | 151 | 147 | 210 | 201 | 195 | 190 | 184 | 178 | 174 |
| | | | | C | 145 | 141 | 138 | 135 | 131 | 128 | 126 | 172 | 167 | 164 | 160 | 155 | 152 | 149 |
| | | | | D | 132 | 129 | 126 | 124 | 121 | 119 | 117 | 156 | 153 | 150 | 147 | 144 | 141 | 139 |
| DVSL-4 | 8" | 4 nails | 127 | B | 210 | 210 | 210 | 210 | 210 | 210 | 205 | 210 | 210 | 210 | 210 | 210 | 210 | 210 |
| | | | | C | 203 | 197 | 193 | 189 | 183 | 179 | 176 | 210 | 210 | 210 | 210 | 210 | 210 | 209 |
| | | | | D | 184 | 180 | 177 | 174 | 169 | 166 | 163 | 210 | 210 | 209 | 206 | 201 | 197 | 194 |
| DVSL-5 | 6-8" | 2 screws | 127 | B | 210 | 210 | 210 | 210 | 210 | 210 | 205 | 210 | 210 | 210 | 210 | 210 | 210 | 210 |
| | | | | C | 203 | 197 | 193 | 189 | 183 | 179 | 176 | 210 | 210 | 210 | 210 | 210 | 210 | 209 |
| | | | | D | 184 | 180 | 177 | 174 | 169 | 166 | 163 | 210 | 210 | 209 | 206 | 201 | 197 | 194 |
| DVSL-6 | 6-8" | 4 screws | 178 | B | 210 | 210 | 210 | 210 | 210 | 210 | 210 | 210 | 210 | 210 | 210 | 210 | 210 | 210 |
| | | | | C | 210 | 210 | 210 | 210 | 210 | 210 | 208 | 210 | 210 | 210 | 210 | 210 | 210 | 210 |
| | | | | D | 210 | 210 | 209 | 206 | 200 | 197 | 193 | 210 | 210 | 210 | 210 | 210 | 210 | 210 |
| **HIP ROOFS (SLOPE 4.5:12 – 6.1:12)** | | | | | | | | | | | | | | | | | | |
| DVSL-1 | 6" | 2 nails | 93 | B | 210 | 210 | 210 | 210 | 210 | 203 | 198 | 210 | 210 | 210 | 210 | 210 | 210 | 210 |
| | | | | C | 196 | 191 | 186 | 183 | 177 | 173 | 170 | 210 | 210 | 210 | 210 | 208 | 203 | 200 |
| | | | | D | 178 | 174 | 171 | 168 | 164 | 160 | 158 | 209 | 204 | 201 | 197 | 192 | 188 | 186 |
| DVSL-2 | 6" | 4 nails | 154 | B | 210 | 210 | 210 | 210 | 210 | 210 | 210 | 210 | 210 | 210 | 210 | 210 | 210 | 210 |
| | | | | C | 210 | 210 | 210 | 210 | 210 | 210 | 210 | 210 | 210 | 210 | 210 | 210 | 210 | 210 |
| | | | | D | 210 | 210 | 210 | 210 | 210 | 206 | 203 | 210 | 210 | 210 | 210 | 210 | 210 | 210 |
| DVSL-3 | 8" | 2 nails | 65 | B | 200 | 192 | 186 | 181 | 176 | 170 | 166 | 210 | 210 | 210 | 210 | 206 | 200 | 195 |
| | | | | C | 164 | 159 | 156 | 153 | 148 | 145 | 142 | 193 | 187 | 183 | 179 | 174 | 170 | 167 |
| | | | | D | 149 | 145 | 143 | 140 | 137 | 134 | 132 | 175 | 171 | 168 | 165 | 161 | 158 | 155 |
| DVSL-4 | 8" | 4 nails | 127 | B | 210 | 210 | 210 | 210 | 210 | 210 | 210 | 210 | 210 | 210 | 210 | 210 | 210 | 210 |
| | | | | C | 210 | 210 | 210 | 210 | 207 | 202 | 199 | 210 | 210 | 210 | 210 | 210 | 210 | 210 |
| | | | | D | 208 | 203 | 200 | 196 | 191 | 187 | 185 | 210 | 210 | 210 | 210 | 210 | 210 | 210 |
| DVSL-5 | 6-8" | 2 screws | 127 | B | 210 | 210 | 210 | 210 | 210 | 210 | 210 | 210 | 210 | 210 | 210 | 210 | 210 | 210 |
| | | | | C | 210 | 210 | 210 | 210 | 207 | 202 | 199 | 210 | 210 | 210 | 210 | 210 | 210 | 210 |
| | | | | D | 208 | 203 | 200 | 196 | 191 | 187 | 185 | 210 | 210 | 210 | 210 | 210 | 210 | 210 |
| DVSL-6 | 6-8" | 4 screws | 178 | B | 210 | 210 | 210 | 210 | 210 | 210 | 210 | 210 | 210 | 210 | 210 | 210 | 210 | 210 |
| | | | | C | 210 | 210 | 210 | 210 | 210 | 210 | 210 | 210 | 210 | 210 | 210 | 210 | 210 | 210 |
| | | | | D | 210 | 210 | 210 | 210 | 210 | 210 | 210 | 210 | 210 | 210 | 210 | 210 | 210 | 210 |
| **HIP ROOFS (SLOPE 6.2:12 – 12:12)** | | | | | | | | | | | | | | | | | | |
| DVSL-1 | 6" | 2 nails | 93 | B | 210 | 210 | 205 | 199 | 193 | 187 | 182 | 210 | 210 | 210 | 210 | 210 | 210 | 210 |
| | | | | C | 180 | 175 | 171 | 168 | 163 | 159 | 156 | 210 | 210 | 210 | 208 | 202 | 197 | 194 |
| | | | | D | 164 | 160 | 157 | 154 | 150 | 147 | 145 | 203 | 198 | 195 | 191 | 186 | 183 | 180 |
| DVSL-2 | 6" | 4 nails | 154 | B | 210 | 210 | 210 | 210 | 210 | 210 | 210 | 210 | 210 | 210 | 210 | 210 | 210 | 210 |
| | | | | C | 210 | 210 | 210 | 210 | 210 | 205 | 201 | 210 | 210 | 210 | 210 | 210 | 210 | 210 |
| | | | | D | 210 | 206 | 202 | 199 | 194 | 190 | 187 | 210 | 210 | 210 | 210 | 210 | 210 | 210 |
| DVSL-3 | 8" | 2 nails | 65 | B | 184 | 176 | 171 | 166 | 161 | 156 | 152 | 210 | 210 | 210 | 206 | 200 | 194 | 189 |
| | | | | C | 151 | 146 | 143 | 140 | 136 | 133 | 131 | 187 | 181 | 178 | 174 | 169 | 165 | 162 |
| | | | | D | 137 | 134 | 131 | 129 | 126 | 123 | 121 | 170 | 166 | 163 | 160 | 156 | 153 | 150 |
| DVSL-4 | 8" | 4 nails | 127 | B | 210 | 210 | 210 | 210 | 210 | 210 | 210 | 210 | 210 | 210 | 210 | 210 | 210 | 210 |
| | | | | C | 210 | 205 | 200 | 196 | 190 | 186 | 183 | 210 | 210 | 210 | 210 | 210 | 210 | 210 |
| | | | | D | 191 | 187 | 183 | 180 | 176 | 172 | 170 | 210 | 210 | 210 | 210 | 210 | 210 | 210 |
| DVSL-5 | 6-8" | 2 screws | 127 | B | 210 | 210 | 210 | 210 | 210 | 210 | 210 | 210 | 210 | 210 | 210 | 210 | 210 | 210 |
| | | | | C | 210 | 205 | 200 | 196 | 190 | 186 | 183 | 210 | 210 | 210 | 210 | 210 | 210 | 210 |
| | | | | D | 191 | 187 | 183 | 180 | 176 | 172 | 170 | 210 | 210 | 210 | 210 | 210 | 210 | 210 |
| DVSL-6 | 6-8" | 4 screws | 178 | B | 210 | 210 | 210 | 210 | 210 | 210 | 210 | 210 | 210 | 210 | 210 | 210 | 210 | 210 |
| | | | | C | 210 | 210 | 210 | 210 | 210 | 210 | 210 | 210 | 210 | 210 | 210 | 210 | 210 | 210 |
| | | | | D | 210 | 210 | 210 | 210 | 208 | 204 | 201 | 210 | 210 | 210 | 210 | 210 | 210 | 210 |
| ROOF OVERHANG REDUCTION FACTOR[11] | | | | | 0.83 | | | | | | | N/A | | | | | | |

**See *Table C2. 1* on page 14 for assembly details, and *General Notes for APPENDIX C2* – APPENDIX C8 on page *13* for referenced superscript table notes.**

**Table C2. 4: Davinci Slate Maximum Wind Speeds of Gable Roof Cladding – 2026 FBC (HVHZ & Non-HVHZ); 2025 CBC; 2024 & 2021 IBC |1/2" Plywood|**

| System No.[1] | Max Shingle Exposure | Shingle Fastener[4] | Allowable Pressure (psf) (ASD)[5,6] | Exposure Category[7] | ZONE 2/3 (CORNER/EDGE)[8] Maximum Wind Speed $V_{ult}$ (mph)[9,10,11] Building Height (ft)[12,13] | | | | | | | ZONE 1 (FIELD)[8] Maximum Wind Speed $V_{ult}$ (mph)[9,10,11] Building Height (ft)[12,13] | | | | | | |
|---|---|---|---|---|---|---|---|---|---|---|---|---|---|---|---|---|---|---|
| | | | | | 15 | 20 | 25 | 30 | 40 | 50 | 60 | 15 | 20 | 25 | 30 | 40 | 50 | 60 |
| **GABLE ROOFS (SLOPE 3:12 – 4.4:12)** | | | | | | | | | | | | | | | | | | |
| DVSL-7 | 6" | 2 nails | 124 | B | 210 | 201 | 195 | 189 | 184 | 178 | 174 | 210 | 210 | 210 | 210 | 210 | 210 | 210 |
| | | | | C | 172 | 167 | 163 | 160 | 155 | 152 | 149 | 210 | 210 | 210 | 210 | 205 | 200 | 196 |
| | | | | D | 156 | 153 | 150 | 147 | 144 | 141 | 138 | 206 | 201 | 197 | 194 | 189 | 185 | 182 |
| DVSL-8 | 6" | 4 nails | 206 | B | 210 | 210 | 210 | 210 | 210 | 210 | 210 | 210 | 210 | 210 | 210 | 210 | 210 | 210 |
| | | | | C | 210 | 210 | 210 | 206 | 200 | 196 | 192 | 210 | 210 | 210 | 210 | 210 | 210 | 210 |
| | | | | D | 201 | 197 | 193 | 190 | 185 | 181 | 179 | 210 | 210 | 210 | 210 | 210 | 210 | 210 |
| DVSL-9 | 8" | 2 nails | 87 | B | 176 | 169 | 163 | 159 | 154 | 149 | 146 | 210 | 210 | 210 | 209 | 203 | 197 | 192 |
| | | | | C | 144 | 140 | 137 | 134 | 130 | 127 | 125 | 190 | 184 | 180 | 177 | 171 | 167 | 164 |
| | | | | D | 131 | 128 | 125 | 123 | 120 | 118 | 116 | 172 | 168 | 165 | 162 | 158 | 155 | 153 |
| DVSL-10 | 8" | 4 nails | 170 | B | 210 | 210 | 210 | 210 | 210 | 209 | 204 | 210 | 210 | 210 | 210 | 210 | 210 | 210 |
| | | | | C | 201 | 196 | 191 | 187 | 182 | 178 | 175 | 210 | 210 | 210 | 210 | 210 | 210 | 210 |
| | | | | D | 183 | 179 | 175 | 172 | 168 | 165 | 162 | 210 | 210 | 210 | 210 | 210 | 210 | 210 |
| DVSL-11 | 6-8" | 2 screws | 170 | B | 210 | 210 | 210 | 210 | 210 | 209 | 204 | 210 | 210 | 210 | 210 | 210 | 210 | 210 |
| | | | | C | 201 | 196 | 191 | 187 | 182 | 178 | 175 | 210 | 210 | 210 | 210 | 210 | 210 | 210 |
| | | | | D | 183 | 179 | 175 | 172 | 168 | 165 | 162 | 210 | 210 | 210 | 210 | 210 | 210 | 210 |
| DVSL-12 | 6-8" | 4 screws | 237 | B | 210 | 210 | 210 | 210 | 210 | 210 | 210 | 210 | 210 | 210 | 210 | 210 | 210 | 210 |
| | | | | C | 210 | 210 | 210 | 210 | 210 | 210 | 206 | 210 | 210 | 210 | 210 | 210 | 210 | 210 |
| | | | | D | 210 | 210 | 207 | 203 | 198 | 194 | 191 | 210 | 210 | 210 | 210 | 210 | 210 | 210 |
| **GABLE ROOFS (SLOPE 4.5:12 – 6.1:12)** | | | | | | | | | | | | | | | | | | |
| DVSL-7 | 6" | 2 nails | 124 | B | 210 | 210 | 210 | 207 | 201 | 194 | 190 | 210 | 210 | 210 | 210 | 210 | 210 | 210 |
| | | | | C | 187 | 182 | 178 | 175 | 169 | 166 | 163 | 210 | 210 | 210 | 210 | 210 | 210 | 210 |
| | | | | D | 170 | 166 | 163 | 160 | 156 | 153 | 151 | 210 | 210 | 210 | 210 | 210 | 210 | 208 |
| DVSL-8 | 6" | 4 nails | 206 | B | 210 | 210 | 210 | 210 | 210 | 210 | 210 | 210 | 210 | 210 | 210 | 210 | 210 | 210 |
| | | | | C | 210 | 210 | 210 | 210 | 210 | 210 | 210 | 210 | 210 | 210 | 210 | 210 | 210 | 210 |
| | | | | D | 210 | 210 | 210 | 207 | 202 | 198 | 195 | 210 | 210 | 210 | 210 | 210 | 210 | 210 |
| DVSL-9 | 8" | 2 nails | 87 | B | 192 | 184 | 178 | 173 | 168 | 163 | 159 | 210 | 210 | 210 | 210 | 210 | 210 | 210 |
| | | | | C | 157 | 153 | 149 | 146 | 142 | 139 | 136 | 210 | 210 | 205 | 201 | 195 | 191 | 187 |
| | | | | D | 143 | 139 | 137 | 134 | 131 | 128 | 126 | 196 | 192 | 188 | 185 | 180 | 177 | 174 |
| DVSL-10 | 8" | 4 nails | 170 | B | 210 | 210 | 210 | 210 | 210 | 210 | 210 | 210 | 210 | 210 | 210 | 210 | 210 | 210 |
| | | | | C | 210 | 210 | 209 | 204 | 198 | 194 | 190 | 210 | 210 | 210 | 210 | 210 | 210 | 210 |
| | | | | D | 199 | 195 | 191 | 188 | 183 | 180 | 177 | 210 | 210 | 210 | 210 | 210 | 210 | 210 |
| DVSL-11 | 6-8" | 2 screws | 170 | B | 210 | 210 | 210 | 210 | 210 | 210 | 210 | 210 | 210 | 210 | 210 | 210 | 210 | 210 |
| | | | | C | 210 | 210 | 209 | 204 | 198 | 194 | 190 | 210 | 210 | 210 | 210 | 210 | 210 | 210 |
| | | | | D | 199 | 195 | 191 | 188 | 183 | 180 | 177 | 210 | 210 | 210 | 210 | 210 | 210 | 210 |
| DVSL-12 | 6-8" | 4 screws | 237 | B | 210 | 210 | 210 | 210 | 210 | 210 | 210 | 210 | 210 | 210 | 210 | 210 | 210 | 210 |
| | | | | C | 210 | 210 | 210 | 210 | 210 | 210 | 210 | 210 | 210 | 210 | 210 | 210 | 210 | 210 |
| | | | | D | 210 | 210 | 210 | 210 | 210 | 210 | 209 | 210 | 210 | 210 | 210 | 210 | 210 | 210 |
| **GABLE ROOFS (SLOPE 6.2:12 – 12:12)** | | | | | | | | | | | | | | | | | | |
| DVSL-7 | 6" | 2 nails | 124 | B | 210 | 210 | 210 | 210 | 210 | 210 | 207 | 210 | 210 | 210 | 210 | 210 | 210 | 210 |
| | | | | C | 204 | 198 | 194 | 190 | 185 | 180 | 177 | 210 | 210 | 210 | 210 | 210 | 210 | 206 |
| | | | | D | 185 | 181 | 178 | 175 | 170 | 167 | 164 | 210 | 210 | 207 | 203 | 198 | 194 | 191 |
| DVSL-8 | 6" | 4 nails | 206 | B | 210 | 210 | 210 | 210 | 210 | 210 | 210 | 210 | 210 | 210 | 210 | 210 | 210 | 210 |
| | | | | C | 210 | 210 | 210 | 210 | 210 | 210 | 210 | 210 | 210 | 210 | 210 | 210 | 210 | 210 |
| | | | | D | 210 | 210 | 210 | 210 | 210 | 210 | 210 | 210 | 210 | 210 | 210 | 210 | 210 | 210 |
| DVSL-9 | 8" | 2 nails | 87 | B | 209 | 200 | 194 | 188 | 183 | 177 | 173 | 210 | 210 | 210 | 210 | 210 | 206 | 201 |
| | | | | C | 171 | 166 | 163 | 159 | 155 | 151 | 148 | 199 | 193 | 189 | 185 | 180 | 176 | 173 |
| | | | | D | 155 | 152 | 149 | 146 | 143 | 140 | 138 | 181 | 177 | 173 | 170 | 166 | 163 | 160 |
| DVSL-10 | 8" | 4 nails | 170 | B | 210 | 210 | 210 | 210 | 210 | 210 | 210 | 210 | 210 | 210 | 210 | 210 | 210 | 210 |
| | | | | C | 210 | 210 | 210 | 210 | 210 | 210 | 207 | 210 | 210 | 210 | 210 | 210 | 210 | 210 |
| | | | | D | 210 | 210 | 208 | 205 | 200 | 196 | 193 | 210 | 210 | 210 | 210 | 210 | 210 | 210 |
| DVSL-11 | 6-8" | 2 screws | 170 | B | 210 | 210 | 210 | 210 | 210 | 210 | 210 | 210 | 210 | 210 | 210 | 210 | 210 | 210 |
| | | | | C | 210 | 210 | 210 | 210 | 210 | 210 | 207 | 210 | 210 | 210 | 210 | 210 | 210 | 210 |
| | | | | D | 210 | 210 | 208 | 205 | 200 | 196 | 193 | 210 | 210 | 210 | 210 | 210 | 210 | 210 |
| DVSL-12 | 6-8" | 4 screws | 237 | B | 210 | 210 | 210 | 210 | 210 | 210 | 210 | 210 | 210 | 210 | 210 | 210 | 210 | 210 |
| | | | | C | 210 | 210 | 210 | 210 | 210 | 210 | 210 | 210 | 210 | 210 | 210 | 210 | 210 | 210 |
| | | | | D | 210 | 210 | 210 | 210 | 210 | 210 | 210 | 210 | 210 | 210 | 210 | 210 | 210 | 210 |
| ROOF OVERHANG REDUCTION FACTOR[11] | | | | | 0.85 | | | | | | | 0.79 | | | | | | |

**See *Table C2. 1* on page 14 for assembly details, and *General Notes for APPENDIX C2* – APPENDIX C8 on page *13* for referenced superscript table notes.**


www.bocaengineering.com BOCA ENGINEERING CO. info@bocaengineering.com
Greater Victoria Area: (250) 477-7777 203-1001 Cloverdale Ave., Victoria BC V8X 4C9
Metro Vancouver: (604) 385-5210 1567 Brearley St., White Rock BC V4B 3M6

**Table C2. 5: Davinci Slate Maximum Wind Speeds of Hip Roof Cladding – 2026 FBC (HVHZ & Non-HVHZ); 2025 CBC; 2024 & 2021 IBC |1/2" Plywood|**

| System No.[1] | Max Shingle Exposure | Shingle Fastener[4] | Allowable Pressure (psf) (ASD)[5,6] | Exposure Category[7] | ZONE 2/3 (CORNER/EDGE)[8] Maximum Wind Speed $V_{ult}$ (mph)[9,10,11] Building Height (ft)[12,13] | | | | | | | ZONE 1 (FIELD)[8] Maximum Wind Speed $V_{ult}$ (mph)[9,10,11] Building Height (ft)[12,13] | | | | | | |
|---|---|---|---|---|---|---|---|---|---|---|---|---|---|---|---|---|---|---|
| | | | | | 15 | 20 | 25 | 30 | 40 | 50 | 60 | 15 | 20 | 25 | 30 | 40 | 50 | 60 |
| **HIP ROOFS (SLOPE 3:12 – 4.4:12)** | | | | | | | | | | | | | | | | | | |
| DVSL-7 | 6" | 2 nails | 124 | B | 210 | 210 | 210 | 210 | 210 | 208 | 203 | 210 | 210 | 210 | 210 | 210 | 210 | 210 |
| | | | | C | 200 | 195 | 191 | 187 | 181 | 177 | 174 | 210 | 210 | 210 | 210 | 210 | 210 | 206 |
| | | | | D | 182 | 178 | 175 | 172 | 167 | 164 | 161 | 210 | 210 | 207 | 203 | 198 | 194 | 191 |
| DVSL-8 | 6" | 4 nails | 206 | B | 210 | 210 | 210 | 210 | 210 | 210 | 210 | 210 | 210 | 210 | 210 | 210 | 210 | 210 |
| | | | | C | 210 | 210 | 210 | 210 | 210 | 210 | 210 | 210 | 210 | 210 | 210 | 210 | 210 | 210 |
| | | | | D | 210 | 210 | 210 | 210 | 210 | 210 | 208 | 210 | 210 | 210 | 210 | 210 | 210 | 210 |
| DVSL-9 | 8" | 2 nails | 87 | B | 205 | 197 | 191 | 185 | 180 | 174 | 170 | 210 | 210 | 210 | 210 | 210 | 206 | 201 |
| | | | | C | 168 | 163 | 160 | 156 | 152 | 148 | 146 | 199 | 193 | 189 | 185 | 180 | 176 | 173 |
| | | | | D | 153 | 149 | 146 | 144 | 140 | 137 | 135 | 181 | 177 | 173 | 170 | 166 | 163 | 160 |
| DVSL-10 | 8" | 4 nails | 170 | B | 210 | 210 | 210 | 210 | 210 | 210 | 210 | 210 | 210 | 210 | 210 | 210 | 210 | 210 |
| | | | | C | 210 | 210 | 210 | 210 | 210 | 207 | 204 | 210 | 210 | 210 | 210 | 210 | 210 | 210 |
| | | | | D | 210 | 208 | 204 | 201 | 196 | 192 | 189 | 210 | 210 | 210 | 210 | 210 | 210 | 210 |
| DVSL-11 | 6-8" | 2 screws | 170 | B | 210 | 210 | 210 | 210 | 210 | 210 | 210 | 210 | 210 | 210 | 210 | 210 | 210 | 210 |
| | | | | C | 210 | 210 | 210 | 210 | 210 | 207 | 204 | 210 | 210 | 210 | 210 | 210 | 210 | 210 |
| | | | | D | 210 | 208 | 204 | 201 | 196 | 192 | 189 | 210 | 210 | 210 | 210 | 210 | 210 | 210 |
| DVSL-12 | 6-8" | 4 screws | 237 | B | 210 | 210 | 210 | 210 | 210 | 210 | 210 | 210 | 210 | 210 | 210 | 210 | 210 | 210 |
| | | | | C | 210 | 210 | 210 | 210 | 210 | 210 | 210 | 210 | 210 | 210 | 210 | 210 | 210 | 210 |
| | | | | D | 210 | 210 | 210 | 210 | 210 | 210 | 210 | 210 | 210 | 210 | 210 | 210 | 210 | 210 |
| **HIP ROOFS (SLOPE 4.5:12 – 6.1:12)** | | | | | | | | | | | | | | | | | | |
| DVSL-7 | 6" | 2 nails | 124 | B | 210 | 210 | 210 | 210 | 210 | 210 | 210 | 210 | 210 | 210 | 210 | 210 | 210 | 210 |
| | | | | C | 210 | 210 | 210 | 210 | 205 | 200 | 196 | 210 | 210 | 210 | 210 | 210 | 210 | 210 |
| | | | | D | 206 | 201 | 197 | 194 | 189 | 185 | 182 | 210 | 210 | 210 | 210 | 210 | 210 | 210 |
| DVSL-8 | 6" | 4 nails | 206 | B | 210 | 210 | 210 | 210 | 210 | 210 | 210 | 210 | 210 | 210 | 210 | 210 | 210 | 210 |
| | | | | C | 210 | 210 | 210 | 210 | 210 | 210 | 210 | 210 | 210 | 210 | 210 | 210 | 210 | 210 |
| | | | | D | 210 | 210 | 210 | 210 | 210 | 210 | 210 | 210 | 210 | 210 | 210 | 210 | 210 | 210 |
| DVSL-9 | 8" | 2 nails | 87 | B | 210 | 210 | 210 | 209 | 203 | 197 | 192 | 210 | 210 | 210 | 210 | 210 | 210 | 210 |
| | | | | C | 190 | 184 | 180 | 177 | 171 | 167 | 164 | 210 | 210 | 210 | 207 | 201 | 197 | 193 |
| | | | | D | 172 | 168 | 165 | 162 | 158 | 155 | 153 | 202 | 198 | 194 | 191 | 186 | 182 | 179 |
| DVSL-10 | 8" | 4 nails | 170 | B | 210 | 210 | 210 | 210 | 210 | 210 | 210 | 210 | 210 | 210 | 210 | 210 | 210 | 210 |
| | | | | C | 210 | 210 | 210 | 210 | 210 | 210 | 210 | 210 | 210 | 210 | 210 | 210 | 210 | 210 |
| | | | | D | 210 | 210 | 210 | 210 | 210 | 210 | 210 | 210 | 210 | 210 | 210 | 210 | 210 | 210 |
| DVSL-11 | 6-8" | 2 screws | 170 | B | 210 | 210 | 210 | 210 | 210 | 210 | 210 | 210 | 210 | 210 | 210 | 210 | 210 | 210 |
| | | | | C | 210 | 210 | 210 | 210 | 210 | 210 | 210 | 210 | 210 | 210 | 210 | 210 | 210 | 210 |
| | | | | D | 210 | 210 | 210 | 210 | 210 | 210 | 210 | 210 | 210 | 210 | 210 | 210 | 210 | 210 |
| DVSL-12 | 6-8" | 4 screws | 237 | B | 210 | 210 | 210 | 210 | 210 | 210 | 210 | 210 | 210 | 210 | 210 | 210 | 210 | 210 |
| | | | | C | 210 | 210 | 210 | 210 | 210 | 210 | 210 | 210 | 210 | 210 | 210 | 210 | 210 | 210 |
| | | | | D | 210 | 210 | 210 | 210 | 210 | 210 | 210 | 210 | 210 | 210 | 210 | 210 | 210 | 210 |
| **HIP ROOFS (SLOPE 6.2:12 – 12:12)** | | | | | | | | | | | | | | | | | | |
| DVSL-7 | 6" | 2 nails | 124 | B | 210 | 210 | 210 | 210 | 210 | 210 | 210 | 210 | 210 | 210 | 210 | 210 | 210 | 210 |
| | | | | C | 208 | 202 | 198 | 194 | 188 | 184 | 180 | 210 | 210 | 210 | 210 | 210 | 210 | 210 |
| | | | | D | 189 | 185 | 181 | 178 | 174 | 170 | 168 | 210 | 210 | 210 | 210 | 210 | 210 | 208 |
| DVSL-8 | 6" | 4 nails | 206 | B | 210 | 210 | 210 | 210 | 210 | 210 | 210 | 210 | 210 | 210 | 210 | 210 | 210 | 210 |
| | | | | C | 210 | 210 | 210 | 210 | 210 | 210 | 210 | 210 | 210 | 210 | 210 | 210 | 210 | 210 |
| | | | | D | 210 | 210 | 210 | 210 | 210 | 210 | 210 | 210 | 210 | 210 | 210 | 210 | 210 | 210 |
| DVSL-9 | 8" | 2 nails | 87 | B | 210 | 204 | 198 | 192 | 187 | 181 | 176 | 210 | 210 | 210 | 210 | 210 | 210 | 210 |
| | | | | C | 174 | 169 | 166 | 162 | 158 | 154 | 151 | 210 | 210 | 205 | 201 | 195 | 191 | 187 |
| | | | | D | 158 | 155 | 152 | 149 | 146 | 143 | 140 | 196 | 192 | 188 | 185 | 180 | 177 | 174 |
| DVSL-10 | 8" | 4 nails | 170 | B | 210 | 210 | 210 | 210 | 210 | 210 | 210 | 210 | 210 | 210 | 210 | 210 | 210 | 210 |
| | | | | C | 210 | 210 | 210 | 210 | 210 | 210 | 210 | 210 | 210 | 210 | 210 | 210 | 210 | 210 |
| | | | | D | 210 | 210 | 210 | 209 | 203 | 199 | 196 | 210 | 210 | 210 | 210 | 210 | 210 | 210 |
| DVSL-11 | 6-8" | 2 screws | 170 | B | 210 | 210 | 210 | 210 | 210 | 210 | 210 | 210 | 210 | 210 | 210 | 210 | 210 | 210 |
| | | | | C | 210 | 210 | 210 | 210 | 210 | 210 | 210 | 210 | 210 | 210 | 210 | 210 | 210 | 210 |
| | | | | D | 210 | 210 | 210 | 209 | 203 | 199 | 196 | 210 | 210 | 210 | 210 | 210 | 210 | 210 |
| DVSL-12 | 6-8" | 4 screws | 237 | B | 210 | 210 | 210 | 210 | 210 | 210 | 210 | 210 | 210 | 210 | 210 | 210 | 210 | 210 |
| | | | | C | 210 | 210 | 210 | 210 | 210 | 210 | 210 | 210 | 210 | 210 | 210 | 210 | 210 | 210 |
| | | | | D | 210 | 210 | 210 | 210 | 210 | 210 | 210 | 210 | 210 | 210 | 210 | 210 | 210 | 210 |
| ROOF OVERHANG REDUCTION FACTOR[11] | | | | | 0.83 | | | | | | | N/A | | | | | | |

**See *Table C2. 1* on page 14 for assembly details, and *General Notes for APPENDIX C2* – APPENDIX C8 on page *13* for referenced superscript table notes.**


www.bocaengineering.com BOCA ENGINEERING CO. info@bocaengineering.com
Greater Victoria Area: (250) 477-7777 203-1001 Cloverdale Ave., Victoria BC V8X 4C9
Metro Vancouver: (604) 385-5210 1567 Brearley St., White Rock BC V4B 3M6

**Table C2. 6: Davinci Slate Maximum Wind Speeds of Gable Roof Cladding – 2026 FBC (HVHZ & Non-HVHZ); 2025 CBC; 2024 & 2021 IBC |5/8" Plywood|**

| System No.[1] | Max Shingle Exposure | Shingle Fastener[4] | Allowable Pressure (psf) (ASD)[5,6] | Exposure Category[7] | ZONE 2/3 (CORNER/EDGE)[8] Maximum Wind Speed $V_{ult}$ (mph)[9,10,11] Building Height (ft)[12,13] | | | | | | | ZONE 1 (FIELD)[8] Maximum Wind Speed $V_{ult}$ (mph)[9,10,11] Building Height (ft)[12,13] | | | | | | |
|---|---|---|---|---|---|---|---|---|---|---|---|---|---|---|---|---|---|---|
| | | | | | 15 | 20 | 25 | 30 | 40 | 50 | 60 | 15 | 20 | 25 | 30 | 40 | 50 | 60 |
| **GABLE ROOFS (SLOPE 3:12 – 4.4:12)** | | | | | | | | | | | | | | | | | | |
| DVSL-13 | 6" | 2 nails | 191 | B | 210 | 210 | 210 | 210 | 210 | 210 | 210 | 210 | 210 | 210 | 210 | 210 | 210 | 210 |
| | | | | C | 210 | 207 | 203 | 199 | 193 | 188 | 185 | 210 | 210 | 210 | 210 | 210 | 210 | 210 |
| | | | | D | 194 | 189 | 186 | 183 | 178 | 175 | 172 | 210 | 210 | 210 | 210 | 210 | 210 | 210 |
| DVSL-14 | 6" | 4 nails | 249 | B | 210 | 210 | 210 | 210 | 210 | 210 | 210 | 210 | 210 | 210 | 210 | 210 | 210 | 210 |
| | | | | C | 210 | 210 | 210 | 210 | 210 | 210 | 210 | 210 | 210 | 210 | 210 | 210 | 210 | 210 |
| | | | | D | 210 | 210 | 210 | 209 | 203 | 199 | 196 | 210 | 210 | 210 | 210 | 210 | 210 | 210 |
| DVSL-15 | 8" | 2 nails | 104 | B | 192 | 184 | 179 | 174 | 169 | 163 | 159 | 210 | 210 | 210 | 210 | 210 | 210 | 210 |
| | | | | C | 157 | 153 | 150 | 147 | 142 | 139 | 137 | 207 | 201 | 197 | 193 | 187 | 183 | 180 |
| | | | | D | 143 | 140 | 137 | 135 | 131 | 129 | 127 | 188 | 184 | 181 | 177 | 173 | 170 | 167 |
| DVSL-16 | 8" | 4 nails | 226 | B | 210 | 210 | 210 | 210 | 210 | 210 | 210 | 210 | 210 | 210 | 210 | 210 | 210 | 210 |
| | | | | C | 210 | 210 | 210 | 210 | 210 | 205 | 201 | 210 | 210 | 210 | 210 | 210 | 210 | 210 |
| | | | | D | 210 | 206 | 202 | 199 | 194 | 190 | 187 | 210 | 210 | 210 | 210 | 210 | 210 | 210 |
| DVSL-17 | 6-8" | 2 screws | 170 | B | 210 | 210 | 210 | 210 | 210 | 209 | 204 | 210 | 210 | 210 | 210 | 210 | 210 | 210 |
| | | | | C | 201 | 196 | 191 | 187 | 182 | 178 | 175 | 210 | 210 | 210 | 210 | 210 | 210 | 210 |
| | | | | D | 183 | 179 | 175 | 172 | 168 | 165 | 162 | 210 | 210 | 210 | 210 | 210 | 210 | 210 |
| DVSL-18 | 6-8" | 4 screws | 237 | B | 210 | 210 | 210 | 210 | 210 | 210 | 210 | 210 | 210 | 210 | 210 | 210 | 210 | 210 |
| | | | | C | 210 | 210 | 210 | 210 | 210 | 210 | 206 | 210 | 210 | 210 | 210 | 210 | 210 | 210 |
| | | | | D | 210 | 210 | 207 | 203 | 198 | 194 | 191 | 210 | 210 | 210 | 210 | 210 | 210 | 210 |
| **GABLE ROOFS (SLOPE 4.5:12 – 6.1:12)** | | | | | | | | | | | | | | | | | | |
| DVSL-13 | 6" | 2 nails | 191 | B | 210 | 210 | 210 | 210 | 210 | 210 | 210 | 210 | 210 | 210 | 210 | 210 | 210 | 210 |
| | | | | C | 210 | 210 | 210 | 210 | 210 | 205 | 202 | 210 | 210 | 210 | 210 | 210 | 210 | 210 |
| | | | | D | 210 | 206 | 203 | 199 | 194 | 190 | 187 | 210 | 210 | 210 | 210 | 210 | 210 | 210 |
| DVSL-14 | 6" | 4 nails | 249 | B | 210 | 210 | 210 | 210 | 210 | 210 | 210 | 210 | 210 | 210 | 210 | 210 | 210 | 210 |
| | | | | C | 210 | 210 | 210 | 210 | 210 | 210 | 210 | 210 | 210 | 210 | 210 | 210 | 210 | 210 |
| | | | | D | 210 | 210 | 210 | 210 | 210 | 210 | 210 | 210 | 210 | 210 | 210 | 210 | 210 | 210 |
| DVSL-15 | 8" | 2 nails | 104 | B | 210 | 201 | 195 | 189 | 184 | 178 | 174 | 210 | 210 | 210 | 210 | 210 | 210 | 210 |
| | | | | C | 172 | 167 | 163 | 160 | 155 | 152 | 149 | 210 | 210 | 210 | 210 | 210 | 209 | 205 |
| | | | | D | 156 | 152 | 150 | 147 | 143 | 140 | 138 | 210 | 210 | 206 | 202 | 197 | 193 | 190 |
| DVSL-16 | 8" | 4 nails | 226 | B | 210 | 210 | 210 | 210 | 210 | 210 | 210 | 210 | 210 | 210 | 210 | 210 | 210 | 210 |
| | | | | C | 210 | 210 | 210 | 210 | 210 | 210 | 210 | 210 | 210 | 210 | 210 | 210 | 210 | 210 |
| | | | | D | 210 | 210 | 210 | 210 | 210 | 207 | 204 | 210 | 210 | 210 | 210 | 210 | 210 | 210 |
| DVSL-17 | 6-8" | 2 screws | 170 | B | 210 | 210 | 210 | 210 | 210 | 210 | 210 | 210 | 210 | 210 | 210 | 210 | 210 | 210 |
| | | | | C | 210 | 210 | 209 | 204 | 198 | 194 | 190 | 210 | 210 | 210 | 210 | 210 | 210 | 210 |
| | | | | D | 199 | 195 | 191 | 188 | 183 | 180 | 177 | 210 | 210 | 210 | 210 | 210 | 210 | 210 |
| DVSL-18 | 6-8" | 4 screws | 237 | B | 210 | 210 | 210 | 210 | 210 | 210 | 210 | 210 | 210 | 210 | 210 | 210 | 210 | 210 |
| | | | | C | 210 | 210 | 210 | 210 | 210 | 210 | 210 | 210 | 210 | 210 | 210 | 210 | 210 | 210 |
| | | | | D | 210 | 210 | 210 | 210 | 210 | 210 | 209 | 210 | 210 | 210 | 210 | 210 | 210 | 210 |
| **GABLE ROOFS (SLOPE 6.2:12 – 12:12)** | | | | | | | | | | | | | | | | | | |
| DVSL-13 | 6" | 2 nails | 191 | B | 210 | 210 | 210 | 210 | 210 | 210 | 210 | 210 | 210 | 210 | 210 | 210 | 210 | 210 |
| | | | | C | 210 | 210 | 210 | 210 | 210 | 210 | 210 | 210 | 210 | 210 | 210 | 210 | 210 | 210 |
| | | | | D | 210 | 210 | 210 | 210 | 210 | 207 | 204 | 210 | 210 | 210 | 210 | 210 | 210 | 210 |
| DVSL-14 | 6" | 4 nails | 249 | B | 210 | 210 | 210 | 210 | 210 | 210 | 210 | 210 | 210 | 210 | 210 | 210 | 210 | 210 |
| | | | | C | 210 | 210 | 210 | 210 | 210 | 210 | 210 | 210 | 210 | 210 | 210 | 210 | 210 | 210 |
| | | | | D | 210 | 210 | 210 | 210 | 210 | 210 | 210 | 210 | 210 | 210 | 210 | 210 | 210 | 210 |
| DVSL-15 | 8" | 2 nails | 104 | B | 210 | 210 | 210 | 206 | 200 | 194 | 189 | 210 | 210 | 210 | 210 | 210 | 210 | 210 |
| | | | | C | 187 | 182 | 178 | 174 | 169 | 165 | 162 | 210 | 210 | 207 | 203 | 197 | 192 | 189 |
| | | | | D | 170 | 166 | 163 | 160 | 156 | 153 | 151 | 198 | 193 | 190 | 186 | 182 | 178 | 175 |
| DVSL-16 | 8" | 4 nails | 226 | B | 210 | 210 | 210 | 210 | 210 | 210 | 210 | 210 | 210 | 210 | 210 | 210 | 210 | 210 |
| | | | | C | 210 | 210 | 210 | 210 | 210 | 210 | 210 | 210 | 210 | 210 | 210 | 210 | 210 | 210 |
| | | | | D | 210 | 210 | 210 | 210 | 210 | 210 | 210 | 210 | 210 | 210 | 210 | 210 | 210 | 210 |
| DVSL-17 | 6-8" | 2 screws | 170 | B | 210 | 210 | 210 | 210 | 210 | 210 | 210 | 210 | 210 | 210 | 210 | 210 | 210 | 210 |
| | | | | C | 210 | 210 | 210 | 210 | 210 | 210 | 207 | 210 | 210 | 210 | 210 | 210 | 210 | 210 |
| | | | | D | 210 | 210 | 208 | 205 | 200 | 196 | 193 | 210 | 210 | 210 | 210 | 210 | 210 | 210 |
| DVSL-18 | 6-8" | 4 screws | 237 | B | 210 | 210 | 210 | 210 | 210 | 210 | 210 | 210 | 210 | 210 | 210 | 210 | 210 | 210 |
| | | | | C | 210 | 210 | 210 | 210 | 210 | 210 | 210 | 210 | 210 | 210 | 210 | 210 | 210 | 210 |
| | | | | D | 210 | 210 | 210 | 210 | 210 | 210 | 210 | 210 | 210 | 210 | 210 | 210 | 210 | 210 |
| ROOF OVERHANG REDUCTION FACTOR[11] | | | | | 0.85 | | | | | | | 0.79 | | | | | | |

**See *Table C2. 1* on page 14 for assembly details, and *General Notes for APPENDIX C2* – APPENDIX C8 on page *13* for referenced superscript table notes.**



www.bocaengineering.com BOCA ENGINEERING CO. info@bocaengineering.com
Greater Victoria Area: (250) 477-7777 203-1001 Cloverdale Ave., Victoria BC V8X 4C9
Metro Vancouver: (604) 385-5210 1567 Brearley St., White Rock BC V4B 3M6

**Table C2. 7: Davinci Slate Maximum Wind Speeds of Hip Roof Cladding – 2026 FBC (HVHZ & Non-HVHZ); 2025 CBC; 2024 & 2021 IBC |5/8" Plywood|**

| System No.[1] | Max Shingle Exposure | Shingle Fastener[4] | Allowable Pressure (psf) (ASD)[5,6] | Exposure Category[7] | ZONE 2/3 (CORNER/EDGE)[8] Maximum Wind Speed $V_{ult}$ (mph)[9,10,11] Building Height (ft)[12,13] | | | | | | | ZONE 1 (FIELD)[8] Maximum Wind Speed $V_{ult}$ (mph)[9,10,11] Building Height (ft)[12,13] | | | | | | |
|---|---|---|---|---|---|---|---|---|---|---|---|---|---|---|---|---|---|---|
| | | | | | 15 | 20 | 25 | 30 | 40 | 50 | 60 | 15 | 20 | 25 | 30 | 40 | 50 | 60 |
| **HIP ROOFS (SLOPE 3:12 – 4.4:12)** | | | | | | | | | | | | | | | | | | |
| DVSL-13 | 6" | 2 nails | 191 | B | 210 | 210 | 210 | 210 | 210 | 210 | 210 | 210 | 210 | 210 | 210 | 210 | 210 | 210 |
| | | | | C | 210 | 210 | 210 | 210 | 210 | 210 | 210 | 210 | 210 | 210 | 210 | 210 | 210 | 210 |
| | | | | D | 210 | 210 | 210 | 210 | 208 | 204 | 200 | 210 | 210 | 210 | 210 | 210 | 210 | 210 |
| DVSL-14 | 6" | 4 nails | 249 | B | 210 | 210 | 210 | 210 | 210 | 210 | 210 | 210 | 210 | 210 | 210 | 210 | 210 | 210 |
| | | | | C | 210 | 210 | 210 | 210 | 210 | 210 | 210 | 210 | 210 | 210 | 210 | 210 | 210 | 210 |
| | | | | D | 210 | 210 | 210 | 210 | 210 | 210 | 210 | 210 | 210 | 210 | 210 | 210 | 210 | 210 |
| DVSL-15 | 8" | 2 nails | 104 | B | 210 | 210 | 208 | 202 | 197 | 190 | 186 | 210 | 210 | 210 | 210 | 210 | 210 | 210 |
| | | | | C | 184 | 178 | 175 | 171 | 166 | 162 | 159 | 210 | 210 | 207 | 203 | 197 | 192 | 189 |
| | | | | D | 167 | 163 | 160 | 157 | 153 | 150 | 148 | 198 | 193 | 190 | 186 | 182 | 178 | 175 |
| DVSL-16 | 8" | 4 nails | 226 | B | 210 | 210 | 210 | 210 | 210 | 210 | 210 | 210 | 210 | 210 | 210 | 210 | 210 | 210 |
| | | | | C | 210 | 210 | 210 | 210 | 210 | 210 | 210 | 210 | 210 | 210 | 210 | 210 | 210 | 210 |
| | | | | D | 210 | 210 | 210 | 210 | 210 | 210 | 210 | 210 | 210 | 210 | 210 | 210 | 210 | 210 |
| DVSL-17 | 6-8" | 2 screws | 170 | B | 210 | 210 | 210 | 210 | 210 | 210 | 210 | 210 | 210 | 210 | 210 | 210 | 210 | 210 |
| | | | | C | 210 | 210 | 210 | 210 | 210 | 207 | 204 | 210 | 210 | 210 | 210 | 210 | 210 | 210 |
| | | | | D | 210 | 208 | 204 | 201 | 196 | 192 | 189 | 210 | 210 | 210 | 210 | 210 | 210 | 210 |
| DVSL-18 | 6-8" | 4 screws | 237 | B | 210 | 210 | 210 | 210 | 210 | 210 | 210 | 210 | 210 | 210 | 210 | 210 | 210 | 210 |
| | | | | C | 210 | 210 | 210 | 210 | 210 | 210 | 210 | 210 | 210 | 210 | 210 | 210 | 210 | 210 |
| | | | | D | 210 | 210 | 210 | 210 | 210 | 210 | 210 | 210 | 210 | 210 | 210 | 210 | 210 | 210 |
| **HIP ROOFS (SLOPE 4.5:12 – 6.1:12)** | | | | | | | | | | | | | | | | | | |
| DVSL-13 | 6" | 2 nails | 191 | B | 210 | 210 | 210 | 210 | 210 | 210 | 210 | 210 | 210 | 210 | 210 | 210 | 210 | 210 |
| | | | | C | 210 | 210 | 210 | 210 | 210 | 210 | 210 | 210 | 210 | 210 | 210 | 210 | 210 | 210 |
| | | | | D | 210 | 210 | 210 | 210 | 210 | 210 | 210 | 210 | 210 | 210 | 210 | 210 | 210 | 210 |
| DVSL-14 | 6" | 4 nails | 249 | B | 210 | 210 | 210 | 210 | 210 | 210 | 210 | 210 | 210 | 210 | 210 | 210 | 210 | 210 |
| | | | | C | 210 | 210 | 210 | 210 | 210 | 210 | 210 | 210 | 210 | 210 | 210 | 210 | 210 | 210 |
| | | | | D | 210 | 210 | 210 | 210 | 210 | 210 | 210 | 210 | 210 | 210 | 210 | 210 | 210 | 210 |
| DVSL-15 | 8" | 2 nails | 104 | B | 210 | 210 | 210 | 210 | 210 | 210 | 210 | 210 | 210 | 210 | 210 | 210 | 210 | 210 |
| | | | | C | 207 | 201 | 197 | 193 | 187 | 183 | 180 | 210 | 210 | 210 | 210 | 210 | 210 | 210 |
| | | | | D | 188 | 184 | 181 | 177 | 173 | 170 | 167 | 210 | 210 | 210 | 208 | 203 | 199 | 196 |
| DVSL-16 | 8" | 4 nails | 226 | B | 210 | 210 | 210 | 210 | 210 | 210 | 210 | 210 | 210 | 210 | 210 | 210 | 210 | 210 |
| | | | | C | 210 | 210 | 210 | 210 | 210 | 210 | 210 | 210 | 210 | 210 | 210 | 210 | 210 | 210 |
| | | | | D | 210 | 210 | 210 | 210 | 210 | 210 | 210 | 210 | 210 | 210 | 210 | 210 | 210 | 210 |
| DVSL-17 | 6-8" | 2 screws | 170 | B | 210 | 210 | 210 | 210 | 210 | 210 | 210 | 210 | 210 | 210 | 210 | 210 | 210 | 210 |
| | | | | C | 210 | 210 | 210 | 210 | 210 | 210 | 210 | 210 | 210 | 210 | 210 | 210 | 210 | 210 |
| | | | | D | 210 | 210 | 210 | 210 | 210 | 210 | 210 | 210 | 210 | 210 | 210 | 210 | 210 | 210 |
| DVSL-18 | 6-8" | 4 screws | 237 | B | 210 | 210 | 210 | 210 | 210 | 210 | 210 | 210 | 210 | 210 | 210 | 210 | 210 | 210 |
| | | | | C | 210 | 210 | 210 | 210 | 210 | 210 | 210 | 210 | 210 | 210 | 210 | 210 | 210 | 210 |
| | | | | D | 210 | 210 | 210 | 210 | 210 | 210 | 210 | 210 | 210 | 210 | 210 | 210 | 210 | 210 |
| **HIP ROOFS (SLOPE 6.2:12 – 12:12)** | | | | | | | | | | | | | | | | | | |
| DVSL-13 | 6" | 2 nails | 191 | B | 210 | 210 | 210 | 210 | 210 | 210 | 210 | 210 | 210 | 210 | 210 | 210 | 210 | 210 |
| | | | | C | 210 | 210 | 210 | 210 | 210 | 210 | 210 | 210 | 210 | 210 | 210 | 210 | 210 | 210 |
| | | | | D | 210 | 210 | 210 | 210 | 210 | 210 | 208 | 210 | 210 | 210 | 210 | 210 | 210 | 210 |
| DVSL-14 | 6" | 4 nails | 249 | B | 210 | 210 | 210 | 210 | 210 | 210 | 210 | 210 | 210 | 210 | 210 | 210 | 210 | 210 |
| | | | | C | 210 | 210 | 210 | 210 | 210 | 210 | 210 | 210 | 210 | 210 | 210 | 210 | 210 | 210 |
| | | | | D | 210 | 210 | 210 | 210 | 210 | 210 | 210 | 210 | 210 | 210 | 210 | 210 | 210 | 210 |
| DVSL-15 | 8" | 2 nails | 104 | B | 210 | 210 | 210 | 210 | 204 | 198 | 193 | 210 | 210 | 210 | 210 | 210 | 210 | 210 |
| | | | | C | 191 | 185 | 181 | 177 | 172 | 168 | 165 | 210 | 210 | 210 | 210 | 210 | 209 | 205 |
| | | | | D | 173 | 169 | 166 | 163 | 159 | 156 | 154 | 210 | 210 | 206 | 202 | 197 | 193 | 190 |
| DVSL-16 | 8" | 4 nails | 226 | B | 210 | 210 | 210 | 210 | 210 | 210 | 210 | 210 | 210 | 210 | 210 | 210 | 210 | 210 |
| | | | | C | 210 | 210 | 210 | 210 | 210 | 210 | 210 | 210 | 210 | 210 | 210 | 210 | 210 | 210 |
| | | | | D | 210 | 210 | 210 | 210 | 210 | 210 | 210 | 210 | 210 | 210 | 210 | 210 | 210 | 210 |
| DVSL-17 | 6-8" | 2 screws | 170 | B | 210 | 210 | 210 | 210 | 210 | 210 | 210 | 210 | 210 | 210 | 210 | 210 | 210 | 210 |
| | | | | C | 210 | 210 | 210 | 210 | 210 | 210 | 210 | 210 | 210 | 210 | 210 | 210 | 210 | 210 |
| | | | | D | 210 | 210 | 210 | 209 | 203 | 199 | 196 | 210 | 210 | 210 | 210 | 210 | 210 | 210 |
| DVSL-18 | 6-8" | 4 screws | 237 | B | 210 | 210 | 210 | 210 | 210 | 210 | 210 | 210 | 210 | 210 | 210 | 210 | 210 | 210 |
| | | | | C | 210 | 210 | 210 | 210 | 210 | 210 | 210 | 210 | 210 | 210 | 210 | 210 | 210 | 210 |
| | | | | D | 210 | 210 | 210 | 210 | 210 | 210 | 210 | 210 | 210 | 210 | 210 | 210 | 210 | 210 |
| ROOF OVERHANG REDUCTION FACTOR[11] | | | | | 0.83 | | | | | | | N/A | | | | | | |

**See *Table C2. 1* on page 14 for assembly details, and *General Notes for APPENDIX C2* – APPENDIX C8 on page *13* for referenced superscript table notes.**


www.bocaengineering.com BOCA ENGINEERING CO. info@bocaengineering.com
Greater Victoria Area: (250) 477-7777 203-1001 Cloverdale Ave., Victoria BC V8X 4C9
Metro Vancouver: (604) 385-5210 1567 Brearley St., White Rock BC V4B 3M6

## APPENDIX C3: DAVINCI SHAKE (DVSH) WIND PRESSURE & WIND SPEED TABLES

**Table C3. 1: Davinci Shake Assembly Configurations**

| System No.[1] | Min Sheathing[2,3] | Max Shingle Exposure | Shingle Fasteners[4] | Allowable Pressure[5,6] (psf)(ASD) |
|---|---|---|---|---|
| **DVSH-1** | 7/16" OSB | 9" | 2 nails per shingle, 11ga 1.75-inch galvanized ring-shank roofing nails | 72 |
| **DVSH-2** | 7/16" OSB | 9" | 4 nails per shingle, 11ga 1.75-inch galvanized ring-shank roofing nails | 171 |
| **DVSH-3** | 7/16" OSB | 10" | 2 nails per shingle, 11ga 1.75-inch galvanized ring-shank roofing nails | 71 |
| **DVSH-4** | 7/16" OSB | 10" | 4 nails per shingle, 11ga 1.75-inch galvanized ring-shank roofing nails | 144 |
| **DVSH-5** | 7/16" OSB | 9-10" | 2 screws per shingle, #10 2-inch wafer head screws | 137 |
| **DVSH-6** | 7/16" OSB | 9-10" | 4 screws per shingle, #10 2-inch wafer head screws | 184 |
| | | | | |
| **DVSH-7** | 1/2" Plywood | 9" | 2 nails per shingle, 11ga 1.75-inch galvanized ring-shank roofing nails | 96 |
| **DVSH-8** | 1/2" Plywood | 9" | 4 nails per shingle, 11ga 1.75-inch galvanized ring-shank roofing nails | 228 |
| **DVSH-9** | 1/2" Plywood | 10" | 2 nails per shingle, 11ga 1.75-inch galvanized ring-shank roofing nails | 95 |
| **DVSH-10** | 1/2" Plywood | 10" | 4 nails per shingle, 11ga 1.75-inch galvanized ring-shank roofing nails | 192 |
| **DVSH-11** | 1/2" Plywood | 9-10" | 2 screws per shingle, #10 2-inch wafer head screws | 183 |
| **DVSH-12** | 1/2" Plywood | 9-10" | 4 screws per shingle, #10 2-inch wafer head screws | 246 |
| | | | | |
| **DVSH-13** | 5/8" Plywood | 9" | 2 nails per shingle, 11ga 1.75-inch galvanized ring-shank roofing nails | 157 |
| **DVSH-14** | 5/8" Plywood | 9" | 4 nails per shingle, 11ga 1.75-inch galvanized ring-shank roofing nails | 264 |
| **DVSH-15** | 5/8" Plywood | 10" | 2 nails per shingle, 11ga 1.75-inch galvanized ring-shank roofing nails | 134 |
| **DVSH-16** | 5/8" Plywood | 10" | 4 nails per shingle, 11ga 1.75-inch galvanized ring-shank roofing nails | 228 |
| **DVSH-17** | 5/8" Plywood | 9-10" | 2 screws per shingle, #10 2-inch wafer head screws | 183 |
| **DVSH-18** | 5/8" Plywood | 9-10" | 4 screws per shingle, #10 2-inch wafer head screws | 246 |

**See *General Notes for APPENDIX C2 – APPENDIX C8* on page *13* for referenced superscript table notes.**

Allowable Pressure (ASD) design values for max 10" exposure can be used for shingle exposures less than 10".

In accordance with the 2026 Florida Building Code (FBC), minimum 19/32-inch (5/8") plywood or wood planks must be installed for new roof deck construction in HVHZ regions.

Unless noted otherwise, the published allowable pressure (ASD) values apply to HVHZ and Non-HVHZ applications, and include a safety factor of 2.

**<WIND SPEED TABLES BEGIN NEXT PAGE>**


www.bocaengineering.com BOCA ENGINEERING CO. info@bocaengineering.com
Greater Victoria Area: (250) 477-7777 203-1001 Cloverdale Ave., Victoria BC V8X 4C9
Metro Vancouver: (604) 385-5210 1567 Brearley St., White Rock BC V4B 3M6

**Table C3. 2: Davinci Shake Maximum Wind Speeds of Gable Roof Cladding – 2026 FBC (Non-HVHZ); 2025 CBC; 2024 & 2021 IBC |7/16" OSB|**

| System No.[1] | Max Shingle Exposure | Shingle Fastener[4] | Allowable Pressure (psf) (ASD)[5,6] | Exposure Category[7] | ZONE 2/3 (CORNER/EDGE)[8] Maximum Wind Speed $V_{ult}$ (mph)[9,10,11] Building Height (ft)[12,13] | | | | | | | ZONE 1 (FIELD)[8] Maximum Wind Speed $V_{ult}$ (mph)[9,10,11] Building Height (ft)[12,13] | | | | | | |
|---|---|---|---|---|---|---|---|---|---|---|---|---|---|---|---|---|---|---|
| | | | | | 15 | 20 | 25 | 30 | 40 | 50 | 60 | 15 | 20 | 25 | 30 | 40 | 50 | 60 |
| **GABLE ROOFS (SLOPE 3:12 – 4.4:12)** | | | | | | | | | | | | | | | | | | |
| DVSH-1 | 9" | 2 nails | 72 | B | 160 | 153 | 149 | 144 | 140 | 136 | 133 | 210 | 202 | 196 | 190 | 185 | 179 | 175 |
| | | | | C | 131 | 127 | 125 | 122 | 118 | 116 | 114 | 173 | 168 | 164 | 161 | 156 | 152 | 150 |
| | | | | D | 119 | 116 | 114 | 112 | 109 | 107 | 106 | 157 | 153 | 150 | 148 | 144 | 141 | 139 |
| DVSH-2 | 9" | 4 nails | 171 | B | 210 | 210 | 210 | 210 | 210 | 209 | 204 | 210 | 210 | 210 | 210 | 210 | 210 | 210 |
| | | | | C | 202 | 196 | 192 | 188 | 183 | 178 | 175 | 210 | 210 | 210 | 210 | 210 | 210 | 210 |
| | | | | D | 183 | 179 | 176 | 173 | 169 | 165 | 163 | 210 | 210 | 210 | 210 | 210 | 210 | 210 |
| DVSH-3 | 10" | 2 nails | 71 | B | 159 | 152 | 148 | 143 | 139 | 135 | 132 | 209 | 201 | 194 | 189 | 184 | 178 | 173 |
| | | | | C | 130 | 126 | 124 | 121 | 118 | 115 | 113 | 171 | 166 | 163 | 160 | 155 | 151 | 149 |
| | | | | D | 118 | 115 | 113 | 111 | 109 | 106 | NA | 156 | 152 | 149 | 147 | 143 | 140 | 138 |
| DVSH-4 | 10" | 4 nails | 144 | B | 210 | 210 | 210 | 204 | 199 | 192 | 187 | 210 | 210 | 210 | 210 | 210 | 210 | 210 |
| | | | | C | 185 | 180 | 176 | 173 | 167 | 164 | 161 | 210 | 210 | 210 | 210 | 210 | 210 | 210 |
| | | | | D | 168 | 164 | 161 | 159 | 155 | 152 | 149 | 210 | 210 | 210 | 209 | 204 | 200 | 197 |
| DVSH-5 | 9-10" | 2 screws | 137 | B | 210 | 210 | 205 | 199 | 194 | 187 | 183 | 210 | 210 | 210 | 210 | 210 | 210 | 210 |
| | | | | C | 181 | 176 | 172 | 168 | 163 | 160 | 157 | 210 | 210 | 210 | 210 | 210 | 210 | 206 |
| | | | | D | 164 | 160 | 157 | 155 | 151 | 148 | 146 | 210 | 210 | 207 | 204 | 199 | 195 | 192 |
| DVSH-6 | 9-10" | 4 screws | 184 | B | 210 | 210 | 210 | 210 | 210 | 210 | 210 | 210 | 210 | 210 | 210 | 210 | 210 | 210 |
| | | | | C | 209 | 204 | 199 | 195 | 189 | 185 | 182 | 210 | 210 | 210 | 210 | 210 | 210 | 210 |
| | | | | D | 190 | 186 | 182 | 179 | 175 | 171 | 169 | 210 | 210 | 210 | 210 | 210 | 210 | 210 |
| **GABLE ROOFS (SLOPE 4.5:12 – 6.1:12)** | | | | | | | | | | | | | | | | | | |
| DVSH-1 | 9" | 2 nails | 72 | B | 174 | 167 | 162 | 157 | 153 | 148 | 145 | 210 | 210 | 210 | 210 | 210 | 204 | 199 |
| | | | | C | 143 | 139 | 136 | 133 | 129 | 126 | 124 | 197 | 191 | 187 | 183 | 178 | 174 | 170 |
| | | | | D | 130 | 127 | 124 | 122 | 119 | 117 | 115 | 179 | 174 | 171 | 168 | 164 | 161 | 158 |
| DVSH-2 | 9" | 4 nails | 171 | B | 210 | 210 | 210 | 210 | 210 | 210 | 210 | 210 | 210 | 210 | 210 | 210 | 210 | 210 |
| | | | | C | 210 | 210 | 209 | 205 | 199 | 194 | 191 | 210 | 210 | 210 | 210 | 210 | 210 | 210 |
| | | | | D | 200 | 195 | 192 | 188 | 184 | 180 | 177 | 210 | 210 | 210 | 210 | 210 | 210 | 210 |
| DVSH-3 | 10" | 2 nails | 71 | B | 173 | 166 | 161 | 156 | 152 | 147 | 144 | 210 | 210 | 210 | 210 | 209 | 202 | 197 |
| | | | | C | 142 | 138 | 135 | 132 | 128 | 125 | 123 | 195 | 190 | 186 | 182 | 176 | 172 | 169 |
| | | | | D | 129 | 126 | 124 | 121 | 118 | 116 | 114 | 177 | 173 | 170 | 167 | 163 | 160 | 157 |
| DVSH-4 | 10" | 4 nails | 144 | B | 210 | 210 | 210 | 210 | 210 | 210 | 204 | 210 | 210 | 210 | 210 | 210 | 210 | 210 |
| | | | | C | 202 | 196 | 192 | 188 | 183 | 178 | 175 | 210 | 210 | 210 | 210 | 210 | 210 | 210 |
| | | | | D | 184 | 179 | 176 | 173 | 169 | 165 | 163 | 210 | 210 | 210 | 210 | 210 | 210 | 210 |
| DVSH-5 | 9-10" | 2 screws | 137 | B | 210 | 210 | 210 | 210 | 210 | 204 | 199 | 210 | 210 | 210 | 210 | 210 | 210 | 210 |
| | | | | C | 197 | 191 | 187 | 183 | 178 | 174 | 171 | 210 | 210 | 210 | 210 | 210 | 210 | 210 |
| | | | | D | 179 | 175 | 172 | 169 | 164 | 161 | 159 | 210 | 210 | 210 | 210 | 210 | 210 | 210 |
| DVSH-6 | 9-10" | 4 screws | 184 | B | 210 | 210 | 210 | 210 | 210 | 210 | 210 | 210 | 210 | 210 | 210 | 210 | 210 | 210 |
| | | | | C | 210 | 210 | 210 | 210 | 206 | 202 | 198 | 210 | 210 | 210 | 210 | 210 | 210 | 210 |
| | | | | D | 207 | 203 | 199 | 195 | 191 | 187 | 184 | 210 | 210 | 210 | 210 | 210 | 210 | 210 |
| **GABLE ROOFS (SLOPE 6.2:12 – 12:12)** | | | | | | | | | | | | | | | | | | |
| DVSH-1 | 9" | 2 nails | 72 | B | 190 | 182 | 177 | 171 | 167 | 161 | 157 | 210 | 210 | 205 | 199 | 194 | 188 | 183 |
| | | | | C | 156 | 151 | 148 | 145 | 141 | 137 | 135 | 181 | 176 | 172 | 169 | 164 | 160 | 157 |
| | | | | D | 141 | 138 | 136 | 133 | 130 | 127 | 125 | 164 | 161 | 158 | 155 | 151 | 148 | 146 |
| DVSH-2 | 9" | 4 nails | 171 | B | 210 | 210 | 210 | 210 | 210 | 210 | 210 | 210 | 210 | 210 | 210 | 210 | 210 | 210 |
| | | | | C | 210 | 210 | 210 | 210 | 210 | 210 | 208 | 210 | 210 | 210 | 210 | 210 | 210 | 210 |
| | | | | D | 210 | 210 | 209 | 205 | 200 | 196 | 193 | 210 | 210 | 210 | 210 | 210 | 210 | 210 |
| DVSH-3 | 10" | 2 nails | 71 | B | 189 | 181 | 175 | 170 | 166 | 160 | 156 | 210 | 210 | 204 | 198 | 193 | 186 | 182 |
| | | | | C | 155 | 150 | 147 | 144 | 140 | 136 | 134 | 180 | 175 | 171 | 167 | 163 | 159 | 156 |
| | | | | D | 140 | 137 | 135 | 132 | 129 | 126 | 124 | 163 | 159 | 157 | 154 | 150 | 147 | 145 |
| DVSH-4 | 10" | 4 nails | 144 | B | 210 | 210 | 210 | 210 | 210 | 210 | 210 | 210 | 210 | 210 | 210 | 210 | 210 | 210 |
| | | | | C | 210 | 210 | 209 | 205 | 199 | 194 | 191 | 210 | 210 | 210 | 210 | 210 | 210 | 210 |
| | | | | D | 200 | 195 | 192 | 188 | 184 | 180 | 177 | 210 | 210 | 210 | 210 | 210 | 209 | 206 |
| DVSH-5 | 9-10" | 2 screws | 137 | B | 210 | 210 | 210 | 210 | 210 | 210 | 210 | 210 | 210 | 210 | 210 | 210 | 210 | 210 |
| | | | | C | 210 | 209 | 204 | 200 | 194 | 190 | 186 | 210 | 210 | 210 | 210 | 210 | 210 | 210 |
| | | | | D | 195 | 190 | 187 | 184 | 179 | 176 | 173 | 210 | 210 | 210 | 210 | 208 | 204 | 201 |
| DVSH-6 | 9-10" | 4 screws | 184 | B | 210 | 210 | 210 | 210 | 210 | 210 | 210 | 210 | 210 | 210 | 210 | 210 | 210 | 210 |
| | | | | C | 210 | 210 | 210 | 210 | 210 | 210 | 210 | 210 | 210 | 210 | 210 | 210 | 210 | 210 |
| | | | | D | 210 | 210 | 210 | 210 | 208 | 203 | 200 | 210 | 210 | 210 | 210 | 210 | 210 | 210 |
| ROOF OVERHANG REDUCTION FACTOR[11] | | | | | 0.85 | | | | | | | 0.79 | | | | | | |

**See *Table C3. 1* on page *21* for assembly details, and *General Notes for APPENDIX C2* – APPENDIX C8 on page *13* for referenced superscript table notes.**

**Table C3. 3: Davinci Shake Maximum Wind Speeds of Hip Roof Cladding – 2026 FBC (Non-HVHZ); 2025 CBC; 2024 & 2021 IBC |7/16" OSB|**

| System No.[1] | Max Shingle Exposure | Shingle Fastener[4] | Allowable Pressure (psf) (ASD)[5,6] | Exposure Category[7] | ZONE 2/3 (CORNER/EDGE)[8] Maximum Wind Speed $V_{ult}$ (mph)[9,10,11] Building Height (ft)[12,13] | | | | | | | ZONE 1 (FIELD)[8] Maximum Wind Speed $V_{ult}$ (mph)[9,10,11] Building Height (ft)[12,13] | | | | | | |
|---|---|---|---|---|---|---|---|---|---|---|---|---|---|---|---|---|---|---|
| | | | | | 15 | 20 | 25 | 30 | 40 | 50 | 60 | 15 | 20 | 25 | 30 | 40 | 50 | 60 |
| **HIP ROOFS (SLOPE 3:12 – 4.4:12)** | | | | | | | | | | | | | | | | | | |
| DVSH-1 | 9" | 2 nails | 72 | B | 187 | 179 | 173 | 168 | 164 | 158 | 155 | 210 | 210 | 205 | 199 | 194 | 188 | 183 |
| | | | | C | 153 | 148 | 145 | 142 | 138 | 135 | 132 | 181 | 176 | 172 | 169 | 164 | 160 | 157 |
| | | | | D | 139 | 136 | 133 | 131 | 128 | 125 | 123 | 164 | 161 | 158 | 155 | 151 | 148 | 146 |
| DVSH-2 | 9" | 4 nails | 171 | B | 210 | 210 | 210 | 210 | 210 | 210 | 210 | 210 | 210 | 210 | 210 | 210 | 210 | 210 |
| | | | | C | 210 | 210 | 210 | 210 | 210 | 208 | 204 | 210 | 210 | 210 | 210 | 210 | 210 | 210 |
| | | | | D | 210 | 209 | 205 | 202 | 197 | 193 | 190 | 210 | 210 | 210 | 210 | 210 | 210 | 210 |
| DVSH-3 | 10" | 2 nails | 71 | B | 185 | 178 | 172 | 167 | 163 | 157 | 154 | 210 | 210 | 204 | 198 | 193 | 186 | 182 |
| | | | | C | 152 | 147 | 144 | 141 | 137 | 134 | 132 | 180 | 175 | 171 | 167 | 163 | 159 | 156 |
| | | | | D | 138 | 135 | 132 | 130 | 127 | 124 | 122 | 163 | 159 | 157 | 154 | 150 | 147 | 145 |
| DVSH-4 | 10" | 4 nails | 144 | B | 210 | 210 | 210 | 210 | 210 | 210 | 210 | 210 | 210 | 210 | 210 | 210 | 210 | 210 |
| | | | | C | 210 | 210 | 205 | 201 | 195 | 191 | 187 | 210 | 210 | 210 | 210 | 210 | 210 | 210 |
| | | | | D | 196 | 192 | 188 | 185 | 180 | 177 | 174 | 210 | 210 | 210 | 210 | 210 | 209 | 206 |
| DVSH-5 | 9-10" | 2 screws | 137 | B | 210 | 210 | 210 | 210 | 210 | 210 | 210 | 210 | 210 | 210 | 210 | 210 | 210 | 210 |
| | | | | C | 210 | 205 | 200 | 196 | 191 | 186 | 183 | 210 | 210 | 210 | 210 | 210 | 210 | 210 |
| | | | | D | 191 | 187 | 184 | 180 | 176 | 172 | 170 | 210 | 210 | 210 | 210 | 208 | 204 | 201 |
| DVSH-6 | 9-10" | 4 screws | 184 | B | 210 | 210 | 210 | 210 | 210 | 210 | 210 | 210 | 210 | 210 | 210 | 210 | 210 | 210 |
| | | | | C | 210 | 210 | 210 | 210 | 210 | 210 | 210 | 210 | 210 | 210 | 210 | 210 | 210 | 210 |
| | | | | D | 210 | 210 | 210 | 209 | 204 | 200 | 197 | 210 | 210 | 210 | 210 | 210 | 210 | 210 |
| **HIP ROOFS (SLOPE 4.5:12 – 6.1:12)** | | | | | | | | | | | | | | | | | | |
| DVSH-1 | 9" | 2 nails | 72 | B | 210 | 202 | 196 | 190 | 185 | 179 | 175 | 210 | 210 | 210 | 210 | 210 | 210 | 205 |
| | | | | C | 173 | 168 | 164 | 161 | 156 | 152 | 150 | 203 | 197 | 193 | 189 | 183 | 179 | 176 |
| | | | | D | 157 | 153 | 150 | 148 | 144 | 141 | 139 | 184 | 180 | 177 | 173 | 169 | 166 | 163 |
| DVSH-2 | 9" | 4 nails | 171 | B | 210 | 210 | 210 | 210 | 210 | 210 | 210 | 210 | 210 | 210 | 210 | 210 | 210 | 210 |
| | | | | C | 210 | 210 | 210 | 210 | 210 | 210 | 210 | 210 | 210 | 210 | 210 | 210 | 210 | 210 |
| | | | | D | 210 | 210 | 210 | 210 | 210 | 210 | 210 | 210 | 210 | 210 | 210 | 210 | 210 | 210 |
| DVSH-3 | 10" | 2 nails | 71 | B | 209 | 201 | 194 | 189 | 184 | 178 | 173 | 210 | 210 | 210 | 210 | 210 | 209 | 204 |
| | | | | C | 171 | 166 | 163 | 160 | 155 | 151 | 149 | 201 | 196 | 191 | 187 | 182 | 178 | 175 |
| | | | | D | 156 | 152 | 149 | 147 | 143 | 140 | 138 | 183 | 179 | 175 | 172 | 168 | 165 | 162 |
| DVSH-4 | 10" | 4 nails | 144 | B | 210 | 210 | 210 | 210 | 210 | 210 | 210 | 210 | 210 | 210 | 210 | 210 | 210 | 210 |
| | | | | C | 210 | 210 | 210 | 210 | 210 | 210 | 210 | 210 | 210 | 210 | 210 | 210 | 210 | 210 |
| | | | | D | 210 | 210 | 210 | 209 | 204 | 200 | 197 | 210 | 210 | 210 | 210 | 210 | 210 | 210 |
| DVSH-5 | 9-10" | 2 screws | 137 | B | 210 | 210 | 210 | 210 | 210 | 210 | 210 | 210 | 210 | 210 | 210 | 210 | 210 | 210 |
| | | | | C | 210 | 210 | 210 | 210 | 210 | 210 | 206 | 210 | 210 | 210 | 210 | 210 | 210 | 210 |
| | | | | D | 210 | 210 | 207 | 204 | 199 | 195 | 192 | 210 | 210 | 210 | 210 | 210 | 210 | 210 |
| DVSH-6 | 9-10" | 4 screws | 184 | B | 210 | 210 | 210 | 210 | 210 | 210 | 210 | 210 | 210 | 210 | 210 | 210 | 210 | 210 |
| | | | | C | 210 | 210 | 210 | 210 | 210 | 210 | 210 | 210 | 210 | 210 | 210 | 210 | 210 | 210 |
| | | | | D | 210 | 210 | 210 | 210 | 210 | 210 | 210 | 210 | 210 | 210 | 210 | 210 | 210 | 210 |
| **HIP ROOFS (SLOPE 6.2:12 – 12:12)** | | | | | | | | | | | | | | | | | | |
| DVSH-1 | 9" | 2 nails | 72 | B | 194 | 186 | 180 | 175 | 170 | 164 | 160 | 210 | 210 | 210 | 210 | 210 | 204 | 199 |
| | | | | C | 159 | 154 | 151 | 148 | 143 | 140 | 138 | 197 | 191 | 187 | 183 | 178 | 174 | 170 |
| | | | | D | 144 | 141 | 138 | 136 | 132 | 130 | 128 | 179 | 174 | 171 | 168 | 164 | 161 | 158 |
| DVSH-2 | 9" | 4 nails | 171 | B | 210 | 210 | 210 | 210 | 210 | 210 | 210 | 210 | 210 | 210 | 210 | 210 | 210 | 210 |
| | | | | C | 210 | 210 | 210 | 210 | 210 | 210 | 210 | 210 | 210 | 210 | 210 | 210 | 210 | 210 |
| | | | | D | 210 | 210 | 210 | 209 | 204 | 200 | 197 | 210 | 210 | 210 | 210 | 210 | 210 | 210 |
| DVSH-3 | 10" | 2 nails | 71 | B | 192 | 184 | 179 | 174 | 169 | 163 | 159 | 210 | 210 | 210 | 210 | 209 | 202 | 197 |
| | | | | C | 157 | 153 | 150 | 147 | 142 | 139 | 137 | 195 | 190 | 186 | 182 | 176 | 172 | 169 |
| | | | | D | 143 | 140 | 137 | 135 | 131 | 129 | 127 | 177 | 173 | 170 | 167 | 163 | 160 | 157 |
| DVSH-4 | 10" | 4 nails | 144 | B | 210 | 210 | 210 | 210 | 210 | 210 | 210 | 210 | 210 | 210 | 210 | 210 | 210 | 210 |
| | | | | C | 210 | 210 | 210 | 209 | 203 | 198 | 195 | 210 | 210 | 210 | 210 | 210 | 210 | 210 |
| | | | | D | 204 | 199 | 195 | 192 | 187 | 183 | 181 | 210 | 210 | 210 | 210 | 210 | 210 | 210 |
| DVSH-5 | 9-10" | 2 screws | 137 | B | 210 | 210 | 210 | 210 | 210 | 210 | 210 | 210 | 210 | 210 | 210 | 210 | 210 | 210 |
| | | | | C | 210 | 210 | 208 | 204 | 198 | 193 | 190 | 210 | 210 | 210 | 210 | 210 | 210 | 210 |
| | | | | D | 199 | 194 | 191 | 187 | 183 | 179 | 176 | 210 | 210 | 210 | 210 | 210 | 210 | 210 |
| DVSH-6 | 9-10" | 4 screws | 184 | B | 210 | 210 | 210 | 210 | 210 | 210 | 210 | 210 | 210 | 210 | 210 | 210 | 210 | 210 |
| | | | | C | 210 | 210 | 210 | 210 | 210 | 210 | 210 | 210 | 210 | 210 | 210 | 210 | 210 | 210 |
| | | | | D | 210 | 210 | 210 | 210 | 210 | 207 | 204 | 210 | 210 | 210 | 210 | 210 | 210 | 210 |
| ROOF OVERHANG REDUCTION FACTOR[11] | | | | | 0.83 | | | | | | | N/A | | | | | | |

**See *Table C3. 1* on page *21* for assembly details, and *General Notes for APPENDIX C2* – APPENDIX C8 on page *13* for referenced superscript table notes.**

**Table C3. 4: Davinci Shake Maximum Wind Speeds of Gable Roof Cladding – 2026 FBC (HVHZ & Non-HVHZ); 2025 CBC; 2024 & 2021 IBC |1/2" Plywood|**

| System No.[1] | Max Shingle Exposure | Shingle Fastener[4] | Allowable Pressure (psf) (ASD)[5,6] | Exposure Category[7] | ZONE 2/3 (CORNER/EDGE)[8] Maximum Wind Speed $V_{ult}$ (mph)[9,10,11] Building Height (ft)[12,13] | | | | | | | ZONE 1 (FIELD)[8] Maximum Wind Speed $V_{ult}$ (mph)[9,10,11] Building Height (ft)[12,13] | | | | | | |
|---|---|---|---|---|---|---|---|---|---|---|---|---|---|---|---|---|---|---|
| | | | | | 15 | 20 | 25 | 30 | 40 | 50 | 60 | 15 | 20 | 25 | 30 | 40 | 50 | 60 |
| **GABLE ROOFS (SLOPE 3:12 – 4.4:12)** | | | | | | | | | | | | | | | | | | |
| DVSH-7 | 9" | 2 nails | 96 | B | 185 | 177 | 172 | 167 | 162 | 157 | 153 | 210 | 210 | 210 | 210 | 210 | 207 | 202 |
| | | | | C | 151 | 147 | 144 | 141 | 137 | 134 | 131 | 199 | 194 | 189 | 186 | 180 | 176 | 173 |
| | | | | D | 137 | 134 | 132 | 129 | 126 | 124 | 122 | 181 | 177 | 174 | 171 | 166 | 163 | 160 |
| DVSH-8 | 9" | 4 nails | 228 | B | 210 | 210 | 210 | 210 | 210 | 210 | 210 | 210 | 210 | 210 | 210 | 210 | 210 | 210 |
| | | | | C | 210 | 210 | 210 | 210 | 210 | 206 | 202 | 210 | 210 | 210 | 210 | 210 | 210 | 210 |
| | | | | D | 210 | 207 | 203 | 200 | 195 | 191 | 188 | 210 | 210 | 210 | 210 | 210 | 210 | 210 |
| DVSH-9 | 10" | 2 nails | 95 | B | 184 | 176 | 171 | 166 | 161 | 156 | 152 | 210 | 210 | 210 | 210 | 210 | 206 | 201 |
| | | | | C | 150 | 146 | 143 | 140 | 136 | 133 | 131 | 198 | 193 | 188 | 185 | 179 | 175 | 172 |
| | | | | D | 137 | 134 | 131 | 129 | 126 | 123 | 121 | 180 | 176 | 173 | 170 | 165 | 162 | 160 |
| DVSH-10 | 10" | 4 nails | 192 | B | 210 | 210 | 210 | 210 | 210 | 210 | 210 | 210 | 210 | 210 | 210 | 210 | 210 | 210 |
| | | | | C | 210 | 208 | 203 | 199 | 193 | 189 | 186 | 210 | 210 | 210 | 210 | 210 | 210 | 210 |
| | | | | D | 194 | 190 | 186 | 183 | 179 | 175 | 172 | 210 | 210 | 210 | 210 | 210 | 210 | 210 |
| DVSH-11 | 9-10" | 2 screws | 183 | B | 210 | 210 | 210 | 210 | 210 | 210 | 210 | 210 | 210 | 210 | 210 | 210 | 210 | 210 |
| | | | | C | 209 | 203 | 199 | 195 | 189 | 184 | 181 | 210 | 210 | 210 | 210 | 210 | 210 | 210 |
| | | | | D | 190 | 185 | 182 | 179 | 174 | 171 | 168 | 210 | 210 | 210 | 210 | 210 | 210 | 210 |
| DVSH-12 | 9-10" | 4 screws | 246 | B | 210 | 210 | 210 | 210 | 210 | 210 | 210 | 210 | 210 | 210 | 210 | 210 | 210 | 210 |
| | | | | C | 210 | 210 | 210 | 210 | 210 | 210 | 210 | 210 | 210 | 210 | 210 | 210 | 210 | 210 |
| | | | | D | 210 | 210 | 210 | 207 | 202 | 198 | 195 | 210 | 210 | 210 | 210 | 210 | 210 | 210 |
| **GABLE ROOFS (SLOPE 4.5:12 – 6.1:12)** | | | | | | | | | | | | | | | | | | |
| DVSH-7 | 9" | 2 nails | 96 | B | 201 | 193 | 187 | 182 | 177 | 171 | 167 | 210 | 210 | 210 | 210 | 210 | 210 | 210 |
| | | | | C | 165 | 160 | 157 | 154 | 149 | 146 | 143 | 210 | 210 | 210 | 210 | 205 | 200 | 197 |
| | | | | D | 150 | 146 | 144 | 141 | 138 | 135 | 133 | 206 | 201 | 198 | 194 | 189 | 186 | 183 |
| DVSH-8 | 9" | 4 nails | 228 | B | 210 | 210 | 210 | 210 | 210 | 210 | 210 | 210 | 210 | 210 | 210 | 210 | 210 | 210 |
| | | | | C | 210 | 210 | 210 | 210 | 210 | 210 | 210 | 210 | 210 | 210 | 210 | 210 | 210 | 210 |
| | | | | D | 210 | 210 | 210 | 210 | 210 | 208 | 205 | 210 | 210 | 210 | 210 | 210 | 210 | 210 |
| DVSH-9 | 10" | 2 nails | 95 | B | 200 | 192 | 186 | 181 | 176 | 170 | 166 | 210 | 210 | 210 | 210 | 210 | 210 | 210 |
| | | | | C | 164 | 159 | 156 | 153 | 148 | 145 | 142 | 210 | 210 | 210 | 210 | 204 | 199 | 196 |
| | | | | D | 149 | 146 | 143 | 140 | 137 | 134 | 132 | 205 | 200 | 197 | 193 | 188 | 185 | 182 |
| DVSH-10 | 10" | 4 nails | 192 | B | 210 | 210 | 210 | 210 | 210 | 210 | 210 | 210 | 210 | 210 | 210 | 210 | 210 | 210 |
| | | | | C | 210 | 210 | 210 | 210 | 210 | 206 | 202 | 210 | 210 | 210 | 210 | 210 | 210 | 210 |
| | | | | D | 210 | 207 | 203 | 200 | 195 | 191 | 188 | 210 | 210 | 210 | 210 | 210 | 210 | 210 |
| DVSH-11 | 9-10" | 2 screws | 183 | B | 210 | 210 | 210 | 210 | 210 | 210 | 210 | 210 | 210 | 210 | 210 | 210 | 210 | 210 |
| | | | | C | 210 | 210 | 210 | 210 | 206 | 201 | 198 | 210 | 210 | 210 | 210 | 210 | 210 | 210 |
| | | | | D | 207 | 202 | 198 | 195 | 190 | 186 | 183 | 210 | 210 | 210 | 210 | 210 | 210 | 210 |
| DVSH-12 | 9-10" | 4 screws | 246 | B | 210 | 210 | 210 | 210 | 210 | 210 | 210 | 210 | 210 | 210 | 210 | 210 | 210 | 210 |
| | | | | C | 210 | 210 | 210 | 210 | 210 | 210 | 210 | 210 | 210 | 210 | 210 | 210 | 210 | 210 |
| | | | | D | 210 | 210 | 210 | 210 | 210 | 210 | 210 | 210 | 210 | 210 | 210 | 210 | 210 | 210 |
| **GABLE ROOFS (SLOPE 6.2:12 – 12:12)** | | | | | | | | | | | | | | | | | | |
| DVSH-7 | 9" | 2 nails | 96 | B | 210 | 210 | 204 | 198 | 193 | 186 | 182 | 210 | 210 | 210 | 210 | 210 | 210 | 210 |
| | | | | C | 180 | 175 | 171 | 167 | 162 | 159 | 156 | 209 | 203 | 199 | 195 | 189 | 185 | 181 |
| | | | | D | 163 | 159 | 157 | 154 | 150 | 147 | 145 | 190 | 185 | 182 | 179 | 174 | 171 | 168 |
| DVSH-8 | 9" | 4 nails | 228 | B | 210 | 210 | 210 | 210 | 210 | 210 | 210 | 210 | 210 | 210 | 210 | 210 | 210 | 210 |
| | | | | C | 210 | 210 | 210 | 210 | 210 | 210 | 210 | 210 | 210 | 210 | 210 | 210 | 210 | 210 |
| | | | | D | 210 | 210 | 210 | 210 | 210 | 210 | 210 | 210 | 210 | 210 | 210 | 210 | 210 | 210 |
| DVSH-9 | 10" | 2 nails | 95 | B | 210 | 209 | 203 | 197 | 192 | 185 | 181 | 210 | 210 | 210 | 210 | 210 | 210 | 210 |
| | | | | C | 179 | 174 | 170 | 166 | 162 | 158 | 155 | 208 | 202 | 198 | 194 | 188 | 184 | 180 |
| | | | | D | 162 | 159 | 156 | 153 | 149 | 146 | 144 | 189 | 184 | 181 | 178 | 174 | 170 | 167 |
| DVSH-10 | 10" | 4 nails | 192 | B | 210 | 210 | 210 | 210 | 210 | 210 | 210 | 210 | 210 | 210 | 210 | 210 | 210 | 210 |
| | | | | C | 210 | 210 | 210 | 210 | 210 | 210 | 210 | 210 | 210 | 210 | 210 | 210 | 210 | 210 |
| | | | | D | 210 | 210 | 210 | 210 | 210 | 208 | 205 | 210 | 210 | 210 | 210 | 210 | 210 | 210 |
| DVSH-11 | 9-10" | 2 screws | 183 | B | 210 | 210 | 210 | 210 | 210 | 210 | 210 | 210 | 210 | 210 | 210 | 210 | 210 | 210 |
| | | | | C | 210 | 210 | 210 | 210 | 210 | 210 | 210 | 210 | 210 | 210 | 210 | 210 | 210 | 210 |
| | | | | D | 210 | 210 | 210 | 210 | 207 | 203 | 200 | 210 | 210 | 210 | 210 | 210 | 210 | 210 |
| DVSH-12 | 9-10" | 4 screws | 246 | B | 210 | 210 | 210 | 210 | 210 | 210 | 210 | 210 | 210 | 210 | 210 | 210 | 210 | 210 |
| | | | | C | 210 | 210 | 210 | 210 | 210 | 210 | 210 | 210 | 210 | 210 | 210 | 210 | 210 | 210 |
| | | | | D | 210 | 210 | 210 | 210 | 210 | 210 | 210 | 210 | 210 | 210 | 210 | 210 | 210 | 210 |
| ROOF OVERHANG REDUCTION FACTOR[11] | | | | | 0.85 | | | | | | | 0.79 | | | | | | |

**See *Table C3. 1* on page *21* for assembly details, and *General Notes for APPENDIX C2* – APPENDIX C8 on page *13* for referenced superscript table notes.**


www.bocaengineering.com BOCA ENGINEERING CO. info@bocaengineering.com
Greater Victoria Area: (250) 477-7777 203-1001 Cloverdale Ave., Victoria BC V8X 4C9
Metro Vancouver: (604) 385-5210 1567 Brearley St., White Rock BC V4B 3M6

**Table C3. 5: Davinci Shake Maximum Wind Speeds of Hip Roof Cladding – 2026 FBC (HVHZ & Non-HVHZ); 2025 CBC; 2024 & 2021 IBC |1/2" Plywood|**

| System No.[1] | Max Shingle Exposure | Shingle Fastener[4] | Allowable Pressure (psf) (ASD)[5,6] | Exposure Category[7] | ZONE 2/3 (CORNER/EDGE)[8] Maximum Wind Speed $V_{ult}$ (mph)[9,10,11] Building Height (ft)[12,13] | | | | | | | ZONE 1 (FIELD)[8] Maximum Wind Speed $V_{ult}$ (mph)[9,10,11] Building Height (ft)[12,13] | | | | | | |
|---|---|---|---|---|---|---|---|---|---|---|---|---|---|---|---|---|---|---|
| | | | | | 15 | 20 | 25 | 30 | 40 | 50 | 60 | 15 | 20 | 25 | 30 | 40 | 50 | 60 |
| **HIP ROOFS (SLOPE 3:12 – 4.4:12)** | | | | | | | | | | | | | | | | | | |
| DVSH-7 | 9" | 2 nails | 96 | B | 210 | 207 | 200 | 194 | 189 | 183 | 179 | 210 | 210 | 210 | 210 | 210 | 210 | 210 |
| | | | | C | 176 | 171 | 168 | 164 | 159 | 156 | 153 | 209 | 203 | 199 | 195 | 189 | 185 | 181 |
| | | | | D | 160 | 156 | 154 | 151 | 147 | 144 | 142 | 190 | 185 | 182 | 179 | 174 | 171 | 168 |
| DVSH-8 | 9" | 4 nails | 228 | B | 210 | 210 | 210 | 210 | 210 | 210 | 210 | 210 | 210 | 210 | 210 | 210 | 210 | 210 |
| | | | | C | 210 | 210 | 210 | 210 | 210 | 210 | 210 | 210 | 210 | 210 | 210 | 210 | 210 | 210 |
| | | | | D | 210 | 210 | 210 | 210 | 210 | 210 | 210 | 210 | 210 | 210 | 210 | 210 | 210 | 210 |
| DVSH-9 | 10" | 2 nails | 95 | B | 210 | 205 | 199 | 193 | 188 | 182 | 178 | 210 | 210 | 210 | 210 | 210 | 210 | 210 |
| | | | | C | 175 | 171 | 167 | 163 | 159 | 155 | 152 | 208 | 202 | 198 | 194 | 188 | 184 | 180 |
| | | | | D | 159 | 156 | 153 | 150 | 146 | 144 | 141 | 189 | 184 | 181 | 178 | 174 | 170 | 167 |
| DVSH-10 | 10" | 4 nails | 192 | B | 210 | 210 | 210 | 210 | 210 | 210 | 210 | 210 | 210 | 210 | 210 | 210 | 210 | 210 |
| | | | | C | 210 | 210 | 210 | 210 | 210 | 210 | 210 | 210 | 210 | 210 | 210 | 210 | 210 | 210 |
| | | | | D | 210 | 210 | 210 | 210 | 208 | 204 | 201 | 210 | 210 | 210 | 210 | 210 | 210 | 210 |
| DVSH-11 | 9-10" | 2 screws | 183 | B | 210 | 210 | 210 | 210 | 210 | 210 | 210 | 210 | 210 | 210 | 210 | 210 | 210 | 210 |
| | | | | C | 210 | 210 | 210 | 210 | 210 | 210 | 210 | 210 | 210 | 210 | 210 | 210 | 210 | 210 |
| | | | | D | 210 | 210 | 210 | 208 | 203 | 199 | 196 | 210 | 210 | 210 | 210 | 210 | 210 | 210 |
| DVSH-12 | 9-10" | 4 screws | 246 | B | 210 | 210 | 210 | 210 | 210 | 210 | 210 | 210 | 210 | 210 | 210 | 210 | 210 | 210 |
| | | | | C | 210 | 210 | 210 | 210 | 210 | 210 | 210 | 210 | 210 | 210 | 210 | 210 | 210 | 210 |
| | | | | D | 210 | 210 | 210 | 210 | 210 | 210 | 210 | 210 | 210 | 210 | 210 | 210 | 210 | 210 |
| **HIP ROOFS (SLOPE 4.5:12 – 6.1:12)** | | | | | | | | | | | | | | | | | | |
| DVSH-7 | 9" | 2 nails | 96 | B | 210 | 210 | 210 | 210 | 210 | 207 | 202 | 210 | 210 | 210 | 210 | 210 | 210 | 210 |
| | | | | C | 199 | 194 | 189 | 186 | 180 | 176 | 173 | 210 | 210 | 210 | 210 | 210 | 207 | 203 |
| | | | | D | 181 | 177 | 174 | 171 | 166 | 163 | 160 | 210 | 208 | 204 | 200 | 195 | 191 | 188 |
| DVSH-8 | 9" | 4 nails | 228 | B | 210 | 210 | 210 | 210 | 210 | 210 | 210 | 210 | 210 | 210 | 210 | 210 | 210 | 210 |
| | | | | C | 210 | 210 | 210 | 210 | 210 | 210 | 210 | 210 | 210 | 210 | 210 | 210 | 210 | 210 |
| | | | | D | 210 | 210 | 210 | 210 | 210 | 210 | 210 | 210 | 210 | 210 | 210 | 210 | 210 | 210 |
| DVSH-9 | 10" | 2 nails | 95 | B | 210 | 210 | 210 | 210 | 210 | 206 | 201 | 210 | 210 | 210 | 210 | 210 | 210 | 210 |
| | | | | C | 198 | 193 | 188 | 185 | 179 | 175 | 172 | 210 | 210 | 210 | 210 | 210 | 206 | 202 |
| | | | | D | 180 | 176 | 173 | 170 | 165 | 162 | 160 | 210 | 206 | 203 | 199 | 194 | 190 | 187 |
| DVSH-10 | 10" | 4 nails | 192 | B | 210 | 210 | 210 | 210 | 210 | 210 | 210 | 210 | 210 | 210 | 210 | 210 | 210 | 210 |
| | | | | C | 210 | 210 | 210 | 210 | 210 | 210 | 210 | 210 | 210 | 210 | 210 | 210 | 210 | 210 |
| | | | | D | 210 | 210 | 210 | 210 | 210 | 210 | 210 | 210 | 210 | 210 | 210 | 210 | 210 | 210 |
| DVSH-11 | 9-10" | 2 screws | 183 | B | 210 | 210 | 210 | 210 | 210 | 210 | 210 | 210 | 210 | 210 | 210 | 210 | 210 | 210 |
| | | | | C | 210 | 210 | 210 | 210 | 210 | 210 | 210 | 210 | 210 | 210 | 210 | 210 | 210 | 210 |
| | | | | D | 210 | 210 | 210 | 210 | 210 | 210 | 210 | 210 | 210 | 210 | 210 | 210 | 210 | 210 |
| DVSH-12 | 9-10" | 4 screws | 246 | B | 210 | 210 | 210 | 210 | 210 | 210 | 210 | 210 | 210 | 210 | 210 | 210 | 210 | 210 |
| | | | | C | 210 | 210 | 210 | 210 | 210 | 210 | 210 | 210 | 210 | 210 | 210 | 210 | 210 | 210 |
| | | | | D | 210 | 210 | 210 | 210 | 210 | 210 | 210 | 210 | 210 | 210 | 210 | 210 | 210 | 210 |
| **HIP ROOFS (SLOPE 6.2:12 – 12:12)** | | | | | | | | | | | | | | | | | | |
| DVSH-7 | 9" | 2 nails | 96 | B | 210 | 210 | 208 | 202 | 196 | 190 | 185 | 210 | 210 | 210 | 210 | 210 | 210 | 210 |
| | | | | C | 183 | 178 | 174 | 171 | 166 | 162 | 159 | 210 | 210 | 210 | 210 | 205 | 200 | 197 |
| | | | | D | 166 | 162 | 160 | 157 | 153 | 150 | 147 | 206 | 201 | 198 | 194 | 189 | 186 | 183 |
| DVSH-8 | 9" | 4 nails | 228 | B | 210 | 210 | 210 | 210 | 210 | 210 | 210 | 210 | 210 | 210 | 210 | 210 | 210 | 210 |
| | | | | C | 210 | 210 | 210 | 210 | 210 | 210 | 210 | 210 | 210 | 210 | 210 | 210 | 210 | 210 |
| | | | | D | 210 | 210 | 210 | 210 | 210 | 210 | 210 | 210 | 210 | 210 | 210 | 210 | 210 | 210 |
| DVSH-9 | 10" | 2 nails | 95 | B | 210 | 210 | 207 | 201 | 195 | 189 | 184 | 210 | 210 | 210 | 210 | 210 | 210 | 210 |
| | | | | C | 182 | 177 | 173 | 170 | 165 | 161 | 158 | 210 | 210 | 210 | 210 | 204 | 199 | 196 |
| | | | | D | 165 | 162 | 159 | 156 | 152 | 149 | 147 | 205 | 200 | 197 | 193 | 188 | 185 | 182 |
| DVSH-10 | 10" | 4 nails | 192 | B | 210 | 210 | 210 | 210 | 210 | 210 | 210 | 210 | 210 | 210 | 210 | 210 | 210 | 210 |
| | | | | C | 210 | 210 | 210 | 210 | 210 | 210 | 210 | 210 | 210 | 210 | 210 | 210 | 210 | 210 |
| | | | | D | 210 | 210 | 210 | 210 | 210 | 210 | 209 | 210 | 210 | 210 | 210 | 210 | 210 | 210 |
| DVSH-11 | 9-10" | 2 screws | 183 | B | 210 | 210 | 210 | 210 | 210 | 210 | 210 | 210 | 210 | 210 | 210 | 210 | 210 | 210 |
| | | | | C | 210 | 210 | 210 | 210 | 210 | 210 | 210 | 210 | 210 | 210 | 210 | 210 | 210 | 210 |
| | | | | D | 210 | 210 | 210 | 210 | 210 | 207 | 204 | 210 | 210 | 210 | 210 | 210 | 210 | 210 |
| DVSH-12 | 9-10" | 4 screws | 246 | B | 210 | 210 | 210 | 210 | 210 | 210 | 210 | 210 | 210 | 210 | 210 | 210 | 210 | 210 |
| | | | | C | 210 | 210 | 210 | 210 | 210 | 210 | 210 | 210 | 210 | 210 | 210 | 210 | 210 | 210 |
| | | | | D | 210 | 210 | 210 | 210 | 210 | 210 | 210 | 210 | 210 | 210 | 210 | 210 | 210 | 210 |
| ROOF OVERHANG REDUCTION FACTOR[11] | | | | | 0.83 | | | | | | | N/A | | | | | | |

**See *Table C3. 1* on page *21* for assembly details, and *General Notes for APPENDIX C2* – APPENDIX C8 on page *13* for referenced superscript table notes.**


www.bocaengineering.com BOCA ENGINEERING CO. info@bocaengineering.com
Greater Victoria Area: (250) 477-7777 203-1001 Cloverdale Ave., Victoria BC V8X 4C9
Metro Vancouver: (604) 385-5210 1567 Brearley St., White Rock BC V4B 3M6

**Table C3. 6: Davinci Shake Maximum Wind Speeds of Gable Roof Cladding – 2026 FBC (HVHZ & Non-HVHZ); 2025 CBC; 2024 & 2021 IBC |5/8" Plywood|**

| System No.[1] | Max Shingle Exposure | Shingle Fastener[4] | Allowable Pressure (psf) (ASD)[5,6] | Exposure Category[7] | ZONE 2/3 (CORNER/EDGE)[8] Maximum Wind Speed $V_{ult}$ (mph)[9,10,11] Building Height (ft)[12,13] | | | | | | | ZONE 1 (FIELD)[8] Maximum Wind Speed $V_{ult}$ (mph)[9,10,11] Building Height (ft)[12,13] | | | | | | |
|---|---|---|---|---|---|---|---|---|---|---|---|---|---|---|---|---|---|---|
| | | | | | 15 | 20 | 25 | 30 | 40 | 50 | 60 | 15 | 20 | 25 | 30 | 40 | 50 | 60 |
| **GABLE ROOFS (SLOPE 3:12 – 4.4:12)** | | | | | | | | | | | | | | | | | | |
| DVSH-13 | 9" | 2 nails | 157 | B | 210 | 210 | 210 | 210 | 207 | 201 | 196 | 210 | 210 | 210 | 210 | 210 | 210 | 210 |
| | | | | C | 193 | 188 | 184 | 180 | 175 | 171 | 168 | 210 | 210 | 210 | 210 | 210 | 210 | 210 |
| | | | | D | 176 | 172 | 169 | 166 | 161 | 158 | 156 | 210 | 210 | 210 | 210 | 210 | 208 | 205 |
| DVSH-14 | 9" | 4 nails | 264 | B | 210 | 210 | 210 | 210 | 210 | 210 | 210 | 210 | 210 | 210 | 210 | 210 | 210 | 210 |
| | | | | C | 210 | 210 | 210 | 210 | 210 | 210 | 210 | 210 | 210 | 210 | 210 | 210 | 210 | 210 |
| | | | | D | 210 | 210 | 210 | 210 | 209 | 205 | 202 | 210 | 210 | 210 | 210 | 210 | 210 | 210 |
| DVSH-15 | 10" | 2 nails | 134 | B | 210 | 209 | 203 | 197 | 192 | 185 | 181 | 210 | 210 | 210 | 210 | 210 | 210 | 210 |
| | | | | C | 179 | 174 | 170 | 166 | 162 | 158 | 155 | 210 | 210 | 210 | 210 | 210 | 208 | 204 |
| | | | | D | 162 | 159 | 156 | 153 | 149 | 146 | 144 | 210 | 209 | 205 | 201 | 196 | 193 | 190 |
| DVSH-16 | 10" | 4 nails | 228 | B | 210 | 210 | 210 | 210 | 210 | 210 | 210 | 210 | 210 | 210 | 210 | 210 | 210 | 210 |
| | | | | C | 210 | 210 | 210 | 210 | 210 | 206 | 202 | 210 | 210 | 210 | 210 | 210 | 210 | 210 |
| | | | | D | 210 | 207 | 203 | 200 | 195 | 191 | 188 | 210 | 210 | 210 | 210 | 210 | 210 | 210 |
| DVSH-17 | 9-10" | 2 screws | 183 | B | 210 | 210 | 210 | 210 | 210 | 210 | 210 | 210 | 210 | 210 | 210 | 210 | 210 | 210 |
| | | | | C | 209 | 203 | 199 | 195 | 189 | 184 | 181 | 210 | 210 | 210 | 210 | 210 | 210 | 210 |
| | | | | D | 190 | 185 | 182 | 179 | 174 | 171 | 168 | 210 | 210 | 210 | 210 | 210 | 210 | 210 |
| DVSH-18 | 9-10" | 4 screws | 246 | B | 210 | 210 | 210 | 210 | 210 | 210 | 210 | 210 | 210 | 210 | 210 | 210 | 210 | 210 |
| | | | | C | 210 | 210 | 210 | 210 | 210 | 210 | 210 | 210 | 210 | 210 | 210 | 210 | 210 | 210 |
| | | | | D | 210 | 210 | 210 | 207 | 202 | 198 | 195 | 210 | 210 | 210 | 210 | 210 | 210 | 210 |
| **GABLE ROOFS (SLOPE 4.5:12 – 6.1:12)** | | | | | | | | | | | | | | | | | | |
| DVSH-13 | 9" | 2 nails | 157 | B | 210 | 210 | 210 | 210 | 210 | 210 | 210 | 210 | 210 | 210 | 210 | 210 | 210 | 210 |
| | | | | C | 210 | 205 | 201 | 196 | 191 | 186 | 183 | 210 | 210 | 210 | 210 | 210 | 210 | 210 |
| | | | | D | 192 | 187 | 184 | 181 | 176 | 173 | 170 | 210 | 210 | 210 | 210 | 210 | 210 | 210 |
| DVSH-14 | 9" | 4 nails | 264 | B | 210 | 210 | 210 | 210 | 210 | 210 | 210 | 210 | 210 | 210 | 210 | 210 | 210 | 210 |
| | | | | C | 210 | 210 | 210 | 210 | 210 | 210 | 210 | 210 | 210 | 210 | 210 | 210 | 210 | 210 |
| | | | | D | 210 | 210 | 210 | 210 | 210 | 210 | 210 | 210 | 210 | 210 | 210 | 210 | 210 | 210 |
| DVSH-15 | 10" | 2 nails | 134 | B | 210 | 210 | 210 | 210 | 209 | 202 | 197 | 210 | 210 | 210 | 210 | 210 | 210 | 210 |
| | | | | C | 195 | 189 | 185 | 181 | 176 | 172 | 169 | 210 | 210 | 210 | 210 | 210 | 210 | 210 |
| | | | | D | 177 | 173 | 170 | 167 | 163 | 159 | 157 | 210 | 210 | 210 | 210 | 210 | 210 | 210 |
| DVSH-16 | 10" | 4 nails | 228 | B | 210 | 210 | 210 | 210 | 210 | 210 | 210 | 210 | 210 | 210 | 210 | 210 | 210 | 210 |
| | | | | C | 210 | 210 | 210 | 210 | 210 | 210 | 210 | 210 | 210 | 210 | 210 | 210 | 210 | 210 |
| | | | | D | 210 | 210 | 210 | 210 | 210 | 208 | 205 | 210 | 210 | 210 | 210 | 210 | 210 | 210 |
| DVSH-17 | 9-10" | 2 screws | 183 | B | 210 | 210 | 210 | 210 | 210 | 210 | 210 | 210 | 210 | 210 | 210 | 210 | 210 | 210 |
| | | | | C | 210 | 210 | 210 | 210 | 206 | 201 | 198 | 210 | 210 | 210 | 210 | 210 | 210 | 210 |
| | | | | D | 207 | 202 | 198 | 195 | 190 | 186 | 183 | 210 | 210 | 210 | 210 | 210 | 210 | 210 |
| DVSH-18 | 9-10" | 4 screws | 246 | B | 210 | 210 | 210 | 210 | 210 | 210 | 210 | 210 | 210 | 210 | 210 | 210 | 210 | 210 |
| | | | | C | 210 | 210 | 210 | 210 | 210 | 210 | 210 | 210 | 210 | 210 | 210 | 210 | 210 | 210 |
| | | | | D | 210 | 210 | 210 | 210 | 210 | 210 | 210 | 210 | 210 | 210 | 210 | 210 | 210 | 210 |
| **GABLE ROOFS (SLOPE 6.2:12 – 12:12)** | | | | | | | | | | | | | | | | | | |
| DVSH-13 | 9" | 2 nails | 157 | B | 210 | 210 | 210 | 210 | 210 | 210 | 210 | 210 | 210 | 210 | 210 | 210 | 210 | 210 |
| | | | | C | 210 | 210 | 210 | 210 | 208 | 203 | 199 | 210 | 210 | 210 | 210 | 210 | 210 | 210 |
| | | | | D | 209 | 204 | 200 | 197 | 192 | 188 | 185 | 210 | 210 | 210 | 210 | 210 | 210 | 210 |
| DVSH-14 | 9" | 4 nails | 264 | B | 210 | 210 | 210 | 210 | 210 | 210 | 210 | 210 | 210 | 210 | 210 | 210 | 210 | 210 |
| | | | | C | 210 | 210 | 210 | 210 | 210 | 210 | 210 | 210 | 210 | 210 | 210 | 210 | 210 | 210 |
| | | | | D | 210 | 210 | 210 | 210 | 210 | 210 | 210 | 210 | 210 | 210 | 210 | 210 | 210 | 210 |
| DVSH-15 | 10" | 2 nails | 134 | B | 210 | 210 | 210 | 210 | 210 | 210 | 210 | 210 | 210 | 210 | 210 | 210 | 210 | 210 |
| | | | | C | 210 | 206 | 202 | 198 | 192 | 187 | 184 | 210 | 210 | 210 | 210 | 210 | 210 | 210 |
| | | | | D | 193 | 188 | 185 | 182 | 177 | 174 | 171 | 210 | 210 | 210 | 210 | 206 | 202 | 199 |
| DVSH-16 | 10" | 4 nails | 228 | B | 210 | 210 | 210 | 210 | 210 | 210 | 210 | 210 | 210 | 210 | 210 | 210 | 210 | 210 |
| | | | | C | 210 | 210 | 210 | 210 | 210 | 210 | 210 | 210 | 210 | 210 | 210 | 210 | 210 | 210 |
| | | | | D | 210 | 210 | 210 | 210 | 210 | 210 | 210 | 210 | 210 | 210 | 210 | 210 | 210 | 210 |
| DVSH-17 | 9-10" | 2 screws | 183 | B | 210 | 210 | 210 | 210 | 210 | 210 | 210 | 210 | 210 | 210 | 210 | 210 | 210 | 210 |
| | | | | C | 210 | 210 | 210 | 210 | 210 | 210 | 210 | 210 | 210 | 210 | 210 | 210 | 210 | 210 |
| | | | | D | 210 | 210 | 210 | 210 | 207 | 203 | 200 | 210 | 210 | 210 | 210 | 210 | 210 | 210 |
| DVSH-18 | 9-10" | 4 screws | 246 | B | 210 | 210 | 210 | 210 | 210 | 210 | 210 | 210 | 210 | 210 | 210 | 210 | 210 | 210 |
| | | | | C | 210 | 210 | 210 | 210 | 210 | 210 | 210 | 210 | 210 | 210 | 210 | 210 | 210 | 210 |
| | | | | D | 210 | 210 | 210 | 210 | 210 | 210 | 210 | 210 | 210 | 210 | 210 | 210 | 210 | 210 |
| ROOF OVERHANG REDUCTION FACTOR[11] | | | | | 0.85 | | | | | | | 0.79 | | | | | | |

**See *Table C3. 1* on page *21* for assembly details, and *General Notes for APPENDIX C2* – APPENDIX C8 on page *13* for referenced superscript table notes.**


www.bocaengineering.com BOCA ENGINEERING CO. info@bocaengineering.com
Greater Victoria Area: (250) 477-7777 203-1001 Cloverdale Ave., Victoria BC V8X 4C9
Metro Vancouver: (604) 385-5210 1567 Brearley St., White Rock BC V4B 3M6

**Table C3. 7: Davinci Shake Maximum Wind Speeds of Hip Roof Cladding – 2026 FBC (HVHZ & Non-HVHZ); 2025 CBC; 2024 & 2021 IBC |5/8" Plywood|**

| System No.[1] | Max Shingle Exposure | Shingle Fastener[4] | Allowable Pressure (psf) (ASD)[5,6] | Exposure Category[7] | ZONE 2/3 (CORNER/EDGE)[8] Maximum Wind Speed $V_{ult}$ (mph)[9,10,11] Building Height (ft)[12,13] | | | | | | | ZONE 1 (FIELD)[8] Maximum Wind Speed $V_{ult}$ (mph)[9,10,11] Building Height (ft)[12,13] | | | | | | |
|---|---|---|---|---|---|---|---|---|---|---|---|---|---|---|---|---|---|---|
| | | | | | 15 | 20 | 25 | 30 | 40 | 50 | 60 | 15 | 20 | 25 | 30 | 40 | 50 | 60 |
| **HIP ROOFS (SLOPE 3:12 – 4.4:12)** | | | | | | | | | | | | | | | | | | |
| DVSH-13 | 9" | 2 nails | 157 | B | 210 | 210 | 210 | 210 | 210 | 210 | 210 | 210 | 210 | 210 | 210 | 210 | 210 | 210 |
| | | | | C | 210 | 210 | 210 | 210 | 204 | 199 | 196 | 210 | 210 | 210 | 210 | 210 | 210 | 210 |
| | | | | D | 205 | 200 | 197 | 193 | 188 | 185 | 182 | 210 | 210 | 210 | 210 | 210 | 210 | 210 |
| DVSH-14 | 9" | 4 nails | 264 | B | 210 | 210 | 210 | 210 | 210 | 210 | 210 | 210 | 210 | 210 | 210 | 210 | 210 | 210 |
| | | | | C | 210 | 210 | 210 | 210 | 210 | 210 | 210 | 210 | 210 | 210 | 210 | 210 | 210 | 210 |
| | | | | D | 210 | 210 | 210 | 210 | 210 | 210 | 210 | 210 | 210 | 210 | 210 | 210 | 210 | 210 |
| DVSH-15 | 10" | 2 nails | 134 | B | 210 | 210 | 210 | 210 | 210 | 210 | 210 | 210 | 210 | 210 | 210 | 210 | 210 | 210 |
| | | | | C | 208 | 203 | 198 | 194 | 188 | 184 | 181 | 210 | 210 | 210 | 210 | 210 | 210 | 210 |
| | | | | D | 189 | 185 | 182 | 178 | 174 | 170 | 168 | 210 | 210 | 210 | 210 | 206 | 202 | 199 |
| DVSH-16 | 10" | 4 nails | 228 | B | 210 | 210 | 210 | 210 | 210 | 210 | 210 | 210 | 210 | 210 | 210 | 210 | 210 | 210 |
| | | | | C | 210 | 210 | 210 | 210 | 210 | 210 | 210 | 210 | 210 | 210 | 210 | 210 | 210 | 210 |
| | | | | D | 210 | 210 | 210 | 210 | 210 | 210 | 210 | 210 | 210 | 210 | 210 | 210 | 210 | 210 |
| DVSH-17 | 9-10" | 2 screws | 183 | B | 210 | 210 | 210 | 210 | 210 | 210 | 210 | 210 | 210 | 210 | 210 | 210 | 210 | 210 |
| | | | | C | 210 | 210 | 210 | 210 | 210 | 210 | 210 | 210 | 210 | 210 | 210 | 210 | 210 | 210 |
| | | | | D | 210 | 210 | 210 | 208 | 203 | 199 | 196 | 210 | 210 | 210 | 210 | 210 | 210 | 210 |
| DVSH-18 | 9-10" | 4 screws | 246 | B | 210 | 210 | 210 | 210 | 210 | 210 | 210 | 210 | 210 | 210 | 210 | 210 | 210 | 210 |
| | | | | C | 210 | 210 | 210 | 210 | 210 | 210 | 210 | 210 | 210 | 210 | 210 | 210 | 210 | 210 |
| | | | | D | 210 | 210 | 210 | 210 | 210 | 210 | 210 | 210 | 210 | 210 | 210 | 210 | 210 | 210 |
| **HIP ROOFS (SLOPE 4.5:12 – 6.1:12)** | | | | | | | | | | | | | | | | | | |
| DVSH-13 | 9" | 2 nails | 157 | B | 210 | 210 | 210 | 210 | 210 | 210 | 210 | 210 | 210 | 210 | 210 | 210 | 210 | 210 |
| | | | | C | 210 | 210 | 210 | 210 | 210 | 210 | 210 | 210 | 210 | 210 | 210 | 210 | 210 | 210 |
| | | | | D | 210 | 210 | 210 | 210 | 210 | 208 | 205 | 210 | 210 | 210 | 210 | 210 | 210 | 210 |
| DVSH-14 | 9" | 4 nails | 264 | B | 210 | 210 | 210 | 210 | 210 | 210 | 210 | 210 | 210 | 210 | 210 | 210 | 210 | 210 |
| | | | | C | 210 | 210 | 210 | 210 | 210 | 210 | 210 | 210 | 210 | 210 | 210 | 210 | 210 | 210 |
| | | | | D | 210 | 210 | 210 | 210 | 210 | 210 | 210 | 210 | 210 | 210 | 210 | 210 | 210 | 210 |
| DVSH-15 | 10" | 2 nails | 134 | B | 210 | 210 | 210 | 210 | 210 | 210 | 210 | 210 | 210 | 210 | 210 | 210 | 210 | 210 |
| | | | | C | 210 | 210 | 210 | 210 | 210 | 208 | 204 | 210 | 210 | 210 | 210 | 210 | 210 | 210 |
| | | | | D | 210 | 209 | 205 | 201 | 196 | 193 | 190 | 210 | 210 | 210 | 210 | 210 | 210 | 210 |
| DVSH-16 | 10" | 4 nails | 228 | B | 210 | 210 | 210 | 210 | 210 | 210 | 210 | 210 | 210 | 210 | 210 | 210 | 210 | 210 |
| | | | | C | 210 | 210 | 210 | 210 | 210 | 210 | 210 | 210 | 210 | 210 | 210 | 210 | 210 | 210 |
| | | | | D | 210 | 210 | 210 | 210 | 210 | 210 | 210 | 210 | 210 | 210 | 210 | 210 | 210 | 210 |
| DVSH-17 | 9-10" | 2 screws | 183 | B | 210 | 210 | 210 | 210 | 210 | 210 | 210 | 210 | 210 | 210 | 210 | 210 | 210 | 210 |
| | | | | C | 210 | 210 | 210 | 210 | 210 | 210 | 210 | 210 | 210 | 210 | 210 | 210 | 210 | 210 |
| | | | | D | 210 | 210 | 210 | 210 | 210 | 210 | 210 | 210 | 210 | 210 | 210 | 210 | 210 | 210 |
| DVSH-18 | 9-10" | 4 screws | 246 | B | 210 | 210 | 210 | 210 | 210 | 210 | 210 | 210 | 210 | 210 | 210 | 210 | 210 | 210 |
| | | | | C | 210 | 210 | 210 | 210 | 210 | 210 | 210 | 210 | 210 | 210 | 210 | 210 | 210 | 210 |
| | | | | D | 210 | 210 | 210 | 210 | 210 | 210 | 210 | 210 | 210 | 210 | 210 | 210 | 210 | 210 |
| **HIP ROOFS (SLOPE 6.2:12 – 12:12)** | | | | | | | | | | | | | | | | | | |
| DVSH-13 | 9" | 2 nails | 157 | B | 210 | 210 | 210 | 210 | 210 | 210 | 210 | 210 | 210 | 210 | 210 | 210 | 210 | 210 |
| | | | | C | 210 | 210 | 210 | 210 | 210 | 207 | 203 | 210 | 210 | 210 | 210 | 210 | 210 | 210 |
| | | | | D | 210 | 208 | 204 | 200 | 195 | 192 | 189 | 210 | 210 | 210 | 210 | 210 | 210 | 210 |
| DVSH-14 | 9" | 4 nails | 264 | B | 210 | 210 | 210 | 210 | 210 | 210 | 210 | 210 | 210 | 210 | 210 | 210 | 210 | 210 |
| | | | | C | 210 | 210 | 210 | 210 | 210 | 210 | 210 | 210 | 210 | 210 | 210 | 210 | 210 | 210 |
| | | | | D | 210 | 210 | 210 | 210 | 210 | 210 | 210 | 210 | 210 | 210 | 210 | 210 | 210 | 210 |
| DVSH-15 | 10" | 2 nails | 134 | B | 210 | 210 | 210 | 210 | 210 | 210 | 210 | 210 | 210 | 210 | 210 | 210 | 210 | 210 |
| | | | | C | 210 | 210 | 206 | 201 | 196 | 191 | 188 | 210 | 210 | 210 | 210 | 210 | 210 | 210 |
| | | | | D | 197 | 192 | 188 | 185 | 181 | 177 | 174 | 210 | 210 | 210 | 210 | 210 | 210 | 210 |
| DVSH-16 | 10" | 4 nails | 228 | B | 210 | 210 | 210 | 210 | 210 | 210 | 210 | 210 | 210 | 210 | 210 | 210 | 210 | 210 |
| | | | | C | 210 | 210 | 210 | 210 | 210 | 210 | 210 | 210 | 210 | 210 | 210 | 210 | 210 | 210 |
| | | | | D | 210 | 210 | 210 | 210 | 210 | 210 | 210 | 210 | 210 | 210 | 210 | 210 | 210 | 210 |
| DVSH-17 | 9-10" | 2 screws | 183 | B | 210 | 210 | 210 | 210 | 210 | 210 | 210 | 210 | 210 | 210 | 210 | 210 | 210 | 210 |
| | | | | C | 210 | 210 | 210 | 210 | 210 | 210 | 210 | 210 | 210 | 210 | 210 | 210 | 210 | 210 |
| | | | | D | 210 | 210 | 210 | 210 | 210 | 207 | 204 | 210 | 210 | 210 | 210 | 210 | 210 | 210 |
| DVSH-18 | 9-10" | 4 screws | 246 | B | 210 | 210 | 210 | 210 | 210 | 210 | 210 | 210 | 210 | 210 | 210 | 210 | 210 | 210 |
| | | | | C | 210 | 210 | 210 | 210 | 210 | 210 | 210 | 210 | 210 | 210 | 210 | 210 | 210 | 210 |
| | | | | D | 210 | 210 | 210 | 210 | 210 | 210 | 210 | 210 | 210 | 210 | 210 | 210 | 210 | 210 |
| ROOF OVERHANG REDUCTION FACTOR[11] | | | | | 0.83 | | | | | | | N/A | | | | | | |

**See *Table C3. 1* on page *21* for assembly details, and *General Notes for APPENDIX C2* – APPENDIX C8 on page *13* for referenced superscript table notes.**


www.bocaengineering.com BOCA ENGINEERING CO. info@bocaengineering.com
Greater Victoria Area: (250) 477-7777 203-1001 Cloverdale Ave., Victoria BC V8X 4C9
Metro Vancouver: (604) 385-5210 1567 Brearley St., White Rock BC V4B 3M6

## APPENDIX C4: SELECT SHAKE (SSH) WIND PRESSURE & WIND SPEED TABLES

**Table C4. 1: Select Shake Assembly Configurations**

| System No.[1] | Min Sheathing[2,3] | Max Shingle Exposure | Shingle Fasteners[4] | Allowable Pressure[5,6] (psf)(ASD) |
|---|---|---|---|---|
| **SSH-1** | 7/16" OSB | 9" | 2 nails per shingle, 11ga 1.75-inch galvanized ring-shank roofing nails | 89 |
| **SSH-2** | 7/16" OSB | 9" | 4 nails per shingle, 11ga 1.75-inch galvanized ring-shank roofing nails | 146 |
| **SSH-3** | 7/16" OSB | 10" | 2 nails per shingle, 11ga 1.75-inch galvanized ring-shank roofing nails | 73 |
| **SSH-4** | 7/16" OSB | 10" | 4 nails per shingle, 11ga 1.75-inch galvanized ring-shank roofing nails | 131 |
| **SSH-5** | 7/16" OSB | 9-10" | 2 screws per shingle, #10 2-inch wafer head screws | 166 |
| **SSH-6** | 1/2" Plywood | 9" | 2 nails per shingle, 11ga 1.75-inch galvanized ring-shank roofing nails | 118 |
| **SSH-7** | 1/2" Plywood | 9" | 4 nails per shingle, 11ga 1.75-inch galvanized ring-shank roofing nails | 195 |
| **SSH-8** | 1/2" Plywood | 10" | 2 nails per shingle, 11ga 1.75-inch galvanized ring-shank roofing nails | 97 |
| **SSH-9** | 1/2" Plywood | 10" | 4 nails per shingle, 11ga 1.75-inch galvanized ring-shank roofing nails | 174 |
| **SSH-10** | 1/2" Plywood | 9-10" | 2 screws per shingle, #10 2-inch wafer head screws | 222 |
| **SSH-11** | 5/8" Plywood | 9" | 2 nails per shingle, 11ga 1.75-inch galvanized ring-shank roofing nails | 140 |
| **SSH-12** | 5/8" Plywood | 9" | 4 nails per shingle, 11ga 1.75-inch galvanized ring-shank roofing nails | 266 |
| **SSH-13** | 5/8" Plywood | 10" | 2 nails per shingle, 11ga 1.75-inch galvanized ring-shank roofing nails | 141 |
| **SSH-14** | 5/8" Plywood | 10" | 4 nails per shingle, 11ga 1.75-inch galvanized ring-shank roofing nails | 245 |
| **SSH-15** | 5/8" Plywood | 9-10" | 2 screws per shingle, #10 2-inch wafer head screws | 222 |

**See *General Notes for APPENDIX C2 – APPENDIX C8* on page *13* for referenced superscript table notes.**

Allowable Pressure (ASD) design values for max 10" exposure can be used for shingle exposures less than 10".

In accordance with the 2026 Florida Building Code (FBC), minimum 19/32-inch (5/8") plywood or wood planks must be installed for new roof deck construction in HVHZ regions.

Unless noted otherwise, the published allowable pressure (ASD) values apply to HVHZ and Non-HVHZ applications, and include a safety factor of 2.

**<WIND SPEED TABLES BEGIN NEXT PAGE>**


www.bocaengineering.com BOCA ENGINEERING CO. info@bocaengineering.com
Greater Victoria Area: (250) 477-7777 203-1001 Cloverdale Ave., Victoria BC V8X 4C9
Metro Vancouver: (604) 385-5210 1567 Brearley St., White Rock BC V4B 3M6

**Table C4. 2: Select Shake Maximum Wind Speeds of Gable Roof Cladding – 2026 FBC (Non-HVHZ); 2025 CBC; 2024 & 2021 IBC |7/16" OSB|**

| System No.[1] | Max Shingle Exposure | Shingle Fastener[4] | Allowable Pressure (psf) (ASD)[5,6] | Exposure Category[7] | ZONE 2/3 (CORNER/EDGE)[8] Maximum Wind Speed $V_{ult}$ (mph)[9,10,11] Building Height (ft)[12,13] | | | | | | | ZONE 1 (FIELD)[8] Maximum Wind Speed $V_{ult}$ (mph)[9,10,11] Building Height (ft)[12,13] | | | | | | |
|---|---|---|---|---|---|---|---|---|---|---|---|---|---|---|---|---|---|---|
| | | | | | 15 | 20 | 25 | 30 | 40 | 50 | 60 | 15 | 20 | 25 | 30 | 40 | 50 | 60 |
| **GABLE ROOFS (SLOPE 3:12 – 4.4:12)** | | | | | | | | | | | | | | | | | | |
| SSH-1 | 9" | 2 nails | 89 | B | 178 | 171 | 165 | 161 | 156 | 151 | 147 | 210 | 210 | 210 | 210 | 206 | 199 | 194 |
| | | | | C | 146 | 142 | 139 | 136 | 132 | 129 | 126 | 192 | 186 | 182 | 179 | 173 | 169 | 166 |
| | | | | D | 132 | 129 | 127 | 125 | 122 | 119 | 117 | 174 | 170 | 167 | 164 | 160 | 157 | 154 |
| SSH-2 | 9" | 4 nails | 146 | B | 210 | 210 | 210 | 206 | 200 | 194 | 189 | 210 | 210 | 210 | 210 | 210 | 210 | 210 |
| | | | | C | 187 | 181 | 177 | 174 | 169 | 165 | 162 | 210 | 210 | 210 | 210 | 210 | 210 | 210 |
| | | | | D | 169 | 166 | 163 | 160 | 156 | 153 | 150 | 210 | 210 | 210 | 210 | 205 | 201 | 198 |
| SSH-3 | 10" | 2 nails | 73 | B | 161 | 154 | 150 | 145 | 141 | 137 | 133 | 210 | 203 | 197 | 191 | 186 | 180 | 176 |
| | | | | C | 132 | 128 | 125 | 123 | 119 | 116 | 114 | 174 | 169 | 165 | 162 | 157 | 153 | 151 |
| | | | | D | 120 | 117 | 115 | 113 | 110 | 108 | 106 | 158 | 154 | 151 | 149 | 145 | 142 | 140 |
| SSH-4 | 10" | 4 nails | 131 | B | 210 | 207 | 201 | 195 | 189 | 183 | 179 | 210 | 210 | 210 | 210 | 210 | 210 | 210 |
| | | | | C | 177 | 172 | 168 | 165 | 160 | 156 | 153 | 210 | 210 | 210 | 210 | 210 | 205 | 202 |
| | | | | D | 161 | 157 | 154 | 151 | 148 | 145 | 142 | 210 | 206 | 203 | 199 | 194 | 190 | 187 |
| SSH-5 | 9-10" | 2 screws | 166 | B | 210 | 210 | 210 | 210 | 210 | 206 | 201 | 210 | 210 | 210 | 210 | 210 | 210 | 210 |
| | | | | C | 199 | 193 | 189 | 185 | 180 | 176 | 173 | 210 | 210 | 210 | 210 | 210 | 210 | 210 |
| | | | | D | 181 | 176 | 173 | 170 | 166 | 163 | 160 | 210 | 210 | 210 | 210 | 210 | 210 | 210 |
| **GABLE ROOFS (SLOPE 4.5:12 – 6.1:12)** | | | | | | | | | | | | | | | | | | |
| SSH-1 | 9" | 2 nails | 89 | B | 194 | 186 | 180 | 175 | 170 | 165 | 161 | 210 | 210 | 210 | 210 | 210 | 210 | 210 |
| | | | | C | 159 | 154 | 151 | 148 | 144 | 140 | 138 | 210 | 210 | 208 | 203 | 198 | 193 | 189 |
| | | | | D | 144 | 141 | 138 | 136 | 133 | 130 | 128 | 198 | 194 | 190 | 187 | 182 | 179 | 176 |
| SSH-2 | 9" | 4 nails | 146 | B | 210 | 210 | 210 | 210 | 210 | 210 | 206 | 210 | 210 | 210 | 210 | 210 | 210 | 210 |
| | | | | C | 203 | 198 | 193 | 189 | 184 | 180 | 176 | 210 | 210 | 210 | 210 | 210 | 210 | 210 |
| | | | | D | 185 | 180 | 177 | 174 | 170 | 166 | 164 | 210 | 210 | 210 | 210 | 210 | 210 | 210 |
| SSH-3 | 10" | 2 nails | 73 | B | 176 | 168 | 163 | 158 | 154 | 149 | 146 | 210 | 210 | 210 | 210 | 210 | 205 | 200 |
| | | | | C | 144 | 140 | 137 | 134 | 130 | 127 | 125 | 198 | 192 | 188 | 184 | 179 | 175 | 172 |
| | | | | D | 131 | 128 | 125 | 123 | 120 | 118 | 116 | 180 | 176 | 172 | 169 | 165 | 162 | 159 |
| SSH-4 | 10" | 4 nails | 131 | B | 210 | 210 | 210 | 210 | 206 | 200 | 195 | 210 | 210 | 210 | 210 | 210 | 210 | 210 |
| | | | | C | 193 | 187 | 183 | 179 | 174 | 170 | 167 | 210 | 210 | 210 | 210 | 210 | 210 | 210 |
| | | | | D | 175 | 171 | 168 | 165 | 161 | 158 | 155 | 210 | 210 | 210 | 210 | 210 | 210 | 210 |
| SSH-5 | 9-10" | 2 screws | 166 | B | 210 | 210 | 210 | 210 | 210 | 210 | 210 | 210 | 210 | 210 | 210 | 210 | 210 | 210 |
| | | | | C | 210 | 210 | 206 | 202 | 196 | 192 | 188 | 210 | 210 | 210 | 210 | 210 | 210 | 210 |
| | | | | D | 197 | 192 | 189 | 186 | 181 | 177 | 175 | 210 | 210 | 210 | 210 | 210 | 210 | 210 |
| **GABLE ROOFS (SLOPE 6.2:12 – 12:12)** | | | | | | | | | | | | | | | | | | |
| SSH-1 | 9" | 2 nails | 89 | B | 210 | 203 | 196 | 191 | 185 | 179 | 175 | 210 | 210 | 210 | 210 | 210 | 209 | 204 |
| | | | | C | 173 | 168 | 164 | 161 | 156 | 153 | 150 | 201 | 196 | 191 | 187 | 182 | 178 | 175 |
| | | | | D | 157 | 153 | 151 | 148 | 144 | 142 | 139 | 183 | 179 | 175 | 172 | 168 | 165 | 162 |
| SSH-2 | 9" | 4 nails | 146 | B | 210 | 210 | 210 | 210 | 210 | 210 | 210 | 210 | 210 | 210 | 210 | 210 | 210 | 210 |
| | | | | C | 210 | 210 | 210 | 206 | 200 | 196 | 192 | 210 | 210 | 210 | 210 | 210 | 210 | 210 |
| | | | | D | 201 | 197 | 193 | 190 | 185 | 181 | 178 | 210 | 210 | 210 | 210 | 210 | 210 | 208 |
| SSH-3 | 10" | 2 nails | 73 | B | 191 | 183 | 178 | 173 | 168 | 163 | 159 | 210 | 210 | 207 | 201 | 195 | 189 | 184 |
| | | | | C | 157 | 152 | 149 | 146 | 142 | 138 | 136 | 182 | 177 | 173 | 170 | 165 | 161 | 158 |
| | | | | D | 142 | 139 | 136 | 134 | 131 | 128 | 126 | 166 | 162 | 159 | 156 | 152 | 149 | 147 |
| SSH-4 | 10" | 4 nails | 131 | B | 210 | 210 | 210 | 210 | 210 | 210 | 210 | 210 | 210 | 210 | 210 | 210 | 210 | 210 |
| | | | | C | 210 | 204 | 200 | 195 | 190 | 185 | 182 | 210 | 210 | 210 | 210 | 210 | 210 | 210 |
| | | | | D | 191 | 186 | 183 | 180 | 175 | 172 | 169 | 210 | 210 | 210 | 209 | 204 | 200 | 197 |
| SSH-5 | 9-10" | 2 screws | 166 | B | 210 | 210 | 210 | 210 | 210 | 210 | 210 | 210 | 210 | 210 | 210 | 210 | 210 | 210 |
| | | | | C | 210 | 210 | 210 | 210 | 210 | 209 | 205 | 210 | 210 | 210 | 210 | 210 | 210 | 210 |
| | | | | D | 210 | 210 | 206 | 202 | 197 | 193 | 190 | 210 | 210 | 210 | 210 | 210 | 210 | 210 |
| ROOF OVERHANG REDUCTION FACTOR[11] | | | | | 0.85 | | | | | | | 0.79 | | | | | | |

**See *Table C4. 1* on page 28 *for* assembly details, and *General Notes for APPENDIX C2* – APPENDIX C8 on page *13* for referenced superscript table notes.**


www.bocaengineering.com BOCA ENGINEERING CO. info@bocaengineering.com
Greater Victoria Area: (250) 477-7777 203-1001 Cloverdale Ave., Victoria BC V8X 4C9
Metro Vancouver: (604) 385-5210 1567 Brearley St., White Rock BC V4B 3M6

**Table C4. 3: Select Shake Maximum Wind Speeds of Hip Roof Cladding – 2026 FBC (Non-HVHZ); 2025 CBC; 2024 & 2021 IBC |7/16" OSB|**

| System No.[1] | Max Shingle Exposure | Shingle Fastener[4] | Allowable Pressure (psf) (ASD)[5,6] | Exposure Category[7] | ZONE 2/3 (CORNER/EDGE)[8] Maximum Wind Speed $V_{ult}$ (mph)[9,10,11] Building Height (ft)[12,13] | | | | | | | ZONE 1 (FIELD)[8] Maximum Wind Speed $V_{ult}$ (mph)[9,10,11] Building Height (ft)[12,13] | | | | | | |
|---|---|---|---|---|---|---|---|---|---|---|---|---|---|---|---|---|---|---|
| | | | | | 15 | 20 | 25 | 30 | 40 | 50 | 60 | 15 | 20 | 25 | 30 | 40 | 50 | 60 |
| **HIP ROOFS (SLOPE 3:12 – 4.4:12)** | | | | | | | | | | | | | | | | | | |
| SSH-1 | 9" | 2 nails | 89 | B | 207 | 199 | 193 | 187 | 182 | 176 | 172 | 210 | 210 | 210 | 210 | 210 | 209 | 204 |
| | | | | C | 170 | 165 | 162 | 158 | 154 | 150 | 147 | 201 | 196 | 191 | 187 | 182 | 178 | 175 |
| | | | | D | 154 | 151 | 148 | 145 | 142 | 139 | 137 | 183 | 179 | 175 | 172 | 168 | 165 | 162 |
| SSH-2 | 9" | 4 nails | 146 | B | 210 | 210 | 210 | 210 | 210 | 210 | 210 | 210 | 210 | 210 | 210 | 210 | 210 | 210 |
| | | | | C | 210 | 210 | 207 | 203 | 197 | 192 | 189 | 210 | 210 | 210 | 210 | 210 | 210 | 210 |
| | | | | D | 198 | 193 | 190 | 186 | 182 | 178 | 175 | 210 | 210 | 210 | 210 | 210 | 210 | 208 |
| SSH-3 | 10" | 2 nails | 73 | B | 188 | 180 | 175 | 170 | 165 | 160 | 156 | 210 | 210 | 207 | 201 | 195 | 189 | 184 |
| | | | | C | 154 | 149 | 146 | 143 | 139 | 136 | 133 | 182 | 177 | 173 | 170 | 165 | 161 | 158 |
| | | | | D | 140 | 136 | 134 | 132 | 128 | 126 | 124 | 166 | 162 | 159 | 156 | 152 | 149 | 147 |
| SSH-4 | 10" | 4 nails | 131 | B | 210 | 210 | 210 | 210 | 210 | 210 | 209 | 210 | 210 | 210 | 210 | 210 | 210 | 210 |
| | | | | C | 206 | 200 | 196 | 192 | 186 | 182 | 179 | 210 | 210 | 210 | 210 | 210 | 210 | 210 |
| | | | | D | 187 | 183 | 180 | 176 | 172 | 169 | 166 | 210 | 210 | 210 | 209 | 204 | 200 | 197 |
| SSH-5 | 9-10" | 2 screws | 166 | B | 210 | 210 | 210 | 210 | 210 | 210 | 210 | 210 | 210 | 210 | 210 | 210 | 210 | 210 |
| | | | | C | 210 | 210 | 210 | 210 | 210 | 205 | 201 | 210 | 210 | 210 | 210 | 210 | 210 | 210 |
| | | | | D | 210 | 206 | 202 | 199 | 194 | 190 | 187 | 210 | 210 | 210 | 210 | 210 | 210 | 210 |
| **HIP ROOFS (SLOPE 4.5:12 – 6.1:12)** | | | | | | | | | | | | | | | | | | |
| SSH-1 | 9" | 2 nails | 89 | B | 210 | 210 | 210 | 210 | 206 | 199 | 194 | 210 | 210 | 210 | 210 | 210 | 210 | 210 |
| | | | | C | 192 | 186 | 182 | 179 | 173 | 169 | 166 | 210 | 210 | 210 | 210 | 204 | 199 | 195 |
| | | | | D | 174 | 170 | 167 | 164 | 160 | 157 | 154 | 205 | 200 | 196 | 193 | 188 | 184 | 181 |
| SSH-2 | 9" | 4 nails | 146 | B | 210 | 210 | 210 | 210 | 210 | 210 | 210 | 210 | 210 | 210 | 210 | 210 | 210 | 210 |
| | | | | C | 210 | 210 | 210 | 210 | 210 | 210 | 210 | 210 | 210 | 210 | 210 | 210 | 210 | 210 |
| | | | | D | 210 | 210 | 210 | 210 | 205 | 201 | 198 | 210 | 210 | 210 | 210 | 210 | 210 | 210 |
| SSH-3 | 10" | 2 nails | 73 | B | 210 | 203 | 197 | 191 | 186 | 180 | 176 | 210 | 210 | 210 | 210 | 210 | 210 | 206 |
| | | | | C | 174 | 169 | 165 | 162 | 157 | 153 | 151 | 204 | 198 | 194 | 190 | 184 | 180 | 177 |
| | | | | D | 158 | 154 | 151 | 149 | 145 | 142 | 140 | 185 | 181 | 178 | 175 | 170 | 167 | 164 |
| SSH-4 | 10" | 4 nails | 131 | B | 210 | 210 | 210 | 210 | 210 | 210 | 210 | 210 | 210 | 210 | 210 | 210 | 210 | 210 |
| | | | | C | 210 | 210 | 210 | 210 | 210 | 205 | 202 | 210 | 210 | 210 | 210 | 210 | 210 | 210 |
| | | | | D | 210 | 206 | 203 | 199 | 194 | 190 | 187 | 210 | 210 | 210 | 210 | 210 | 210 | 210 |
| SSH-5 | 9-10" | 2 screws | 166 | B | 210 | 210 | 210 | 210 | 210 | 210 | 210 | 210 | 210 | 210 | 210 | 210 | 210 | 210 |
| | | | | C | 210 | 210 | 210 | 210 | 210 | 210 | 210 | 210 | 210 | 210 | 210 | 210 | 210 | 210 |
| | | | | D | 210 | 210 | 210 | 210 | 210 | 210 | 210 | 210 | 210 | 210 | 210 | 210 | 210 | 210 |
| **HIP ROOFS (SLOPE 6.2:12 – 12:12)** | | | | | | | | | | | | | | | | | | |
| SSH-1 | 9" | 2 nails | 89 | B | 210 | 206 | 200 | 194 | 189 | 183 | 178 | 210 | 210 | 210 | 210 | 210 | 210 | 210 |
| | | | | C | 176 | 171 | 168 | 164 | 159 | 156 | 153 | 210 | 210 | 208 | 203 | 198 | 193 | 189 |
| | | | | D | 160 | 156 | 154 | 151 | 147 | 144 | 142 | 198 | 194 | 190 | 187 | 182 | 179 | 176 |
| SSH-2 | 9" | 4 nails | 146 | B | 210 | 210 | 210 | 210 | 210 | 210 | 210 | 210 | 210 | 210 | 210 | 210 | 210 | 210 |
| | | | | C | 210 | 210 | 210 | 210 | 204 | 199 | 196 | 210 | 210 | 210 | 210 | 210 | 210 | 210 |
| | | | | D | 205 | 200 | 197 | 193 | 188 | 185 | 182 | 210 | 210 | 210 | 210 | 210 | 210 | 210 |
| SSH-3 | 10" | 2 nails | 73 | B | 195 | 187 | 181 | 176 | 171 | 166 | 162 | 210 | 210 | 210 | 210 | 210 | 205 | 200 |
| | | | | C | 160 | 155 | 152 | 149 | 144 | 141 | 138 | 198 | 192 | 188 | 184 | 179 | 175 | 172 |
| | | | | D | 145 | 142 | 139 | 137 | 133 | 131 | 129 | 180 | 176 | 172 | 169 | 165 | 162 | 159 |
| SSH-4 | 10" | 4 nails | 131 | B | 210 | 210 | 210 | 210 | 210 | 210 | 210 | 210 | 210 | 210 | 210 | 210 | 210 | 210 |
| | | | | C | 210 | 208 | 203 | 199 | 193 | 189 | 186 | 210 | 210 | 210 | 210 | 210 | 210 | 210 |
| | | | | D | 194 | 190 | 186 | 183 | 179 | 175 | 172 | 210 | 210 | 210 | 210 | 210 | 210 | 210 |
| SSH-5 | 9-10" | 2 screws | 166 | B | 210 | 210 | 210 | 210 | 210 | 210 | 210 | 210 | 210 | 210 | 210 | 210 | 210 | 210 |
| | | | | C | 210 | 210 | 210 | 210 | 210 | 210 | 209 | 210 | 210 | 210 | 210 | 210 | 210 | 210 |
| | | | | D | 210 | 210 | 210 | 206 | 201 | 197 | 194 | 210 | 210 | 210 | 210 | 210 | 210 | 210 |
| ROOF OVERHANG REDUCTION FACTOR[11] | | | | | 0.83 | | | | | | | N/A | | | | | | |

**See *Table C4. 1* on page *28* for assembly details, and *General Notes for APPENDIX C2* – APPENDIX C8 on page *13* for referenced superscript table notes.**


www.bocaengineering.com BOCA ENGINEERING CO. info@bocaengineering.com
Greater Victoria Area: (250) 477-7777 203-1001 Cloverdale Ave., Victoria BC V8X 4C9
Metro Vancouver: (604) 385-5210 1567 Brearley St., White Rock BC V4B 3M6

**Table C4. 4: Select Shake Maximum Wind Speeds of Gable Roof Cladding – 2026 FBC (HVHZ & Non-HVHZ); 2025 CBC; 2024 & 2021 IBC |1/2" PLYWOOD|**

| System No.[1] | Max Shingle Exposure | Shingle Fastener[4] | Allowable Pressure (psf) (ASD)[5,6] | Exposure Category[7] | ZONE 2/3 (CORNER/EDGE)[8] Maximum Wind Speed $V_{ult}$ (mph)[9,10,11] Building Height (ft)[12,13] | | | | | | | ZONE 1 (FIELD)[8] Maximum Wind Speed $V_{ult}$ (mph)[9,10,11] Building Height (ft)[12,13] | | | | | | |
|---|---|---|---|---|---|---|---|---|---|---|---|---|---|---|---|---|---|---|
| | | | | | 15 | 20 | 25 | 30 | 40 | 50 | 60 | 15 | 20 | 25 | 30 | 40 | 50 | 60 |
| **GABLE ROOFS (SLOPE 3:12 – 4.4:12)** | | | | | | | | | | | | | | | | | | |
| SSH-6 | 9" | 2 nails | 118 | B | 205 | 196 | 190 | 185 | 180 | 174 | 170 | 210 | 210 | 210 | 210 | 210 | 210 | 210 |
| | | | | C | 168 | 163 | 159 | 156 | 152 | 148 | 145 | 210 | 210 | 210 | 206 | 200 | 195 | 192 |
| | | | | D | 152 | 149 | 146 | 144 | 140 | 137 | 135 | 201 | 196 | 192 | 189 | 184 | 181 | 178 |
| SSH-7 | 9" | 4 nails | 195 | B | 210 | 210 | 210 | 210 | 210 | 210 | 210 | 210 | 210 | 210 | 210 | 210 | 210 | 210 |
| | | | | C | 210 | 210 | 205 | 201 | 195 | 190 | 187 | 210 | 210 | 210 | 210 | 210 | 210 | 210 |
| | | | | D | 196 | 191 | 188 | 185 | 180 | 176 | 174 | 210 | 210 | 210 | 210 | 210 | 210 | 210 |
| SSH-8 | 10" | 2 nails | 97 | B | 186 | 178 | 173 | 168 | 163 | 158 | 154 | 210 | 210 | 210 | 210 | 210 | 208 | 203 |
| | | | | C | 152 | 148 | 145 | 142 | 137 | 134 | 132 | 200 | 195 | 190 | 186 | 181 | 177 | 174 |
| | | | | D | 138 | 135 | 132 | 130 | 127 | 124 | 122 | 182 | 178 | 174 | 171 | 167 | 164 | 161 |
| SSH-9 | 10" | 4 nails | 174 | B | 210 | 210 | 210 | 210 | 210 | 210 | 206 | 210 | 210 | 210 | 210 | 210 | 210 | 210 |
| | | | | C | 204 | 198 | 194 | 190 | 184 | 180 | 177 | 210 | 210 | 210 | 210 | 210 | 210 | 210 |
| | | | | D | 185 | 181 | 177 | 174 | 170 | 167 | 164 | 210 | 210 | 210 | 210 | 210 | 210 | 210 |
| SSH-10 | 9-10" | 2 screws | 222 | B | 210 | 210 | 210 | 210 | 210 | 210 | 210 | 210 | 210 | 210 | 210 | 210 | 210 | 210 |
| | | | | C | 210 | 210 | 210 | 210 | 208 | 203 | 200 | 210 | 210 | 210 | 210 | 210 | 210 | 210 |
| | | | | D | 209 | 204 | 200 | 197 | 192 | 188 | 185 | 210 | 210 | 210 | 210 | 210 | 210 | 210 |
| **GABLE ROOFS (SLOPE 4.5:12 – 6.1:12)** | | | | | | | | | | | | | | | | | | |
| SSH-6 | 9" | 2 nails | 118 | B | 210 | 210 | 208 | 201 | 196 | 190 | 185 | 210 | 210 | 210 | 210 | 210 | 210 | 210 |
| | | | | C | 183 | 178 | 174 | 170 | 165 | 161 | 159 | 210 | 210 | 210 | 210 | 210 | 210 | 210 |
| | | | | D | 166 | 162 | 159 | 157 | 153 | 150 | 147 | 210 | 210 | 210 | 210 | 210 | 206 | 203 |
| SSH-7 | 9" | 4 nails | 195 | B | 210 | 210 | 210 | 210 | 210 | 210 | 210 | 210 | 210 | 210 | 210 | 210 | 210 | 210 |
| | | | | C | 210 | 210 | 210 | 210 | 210 | 208 | 204 | 210 | 210 | 210 | 210 | 210 | 210 | 210 |
| | | | | D | 210 | 209 | 205 | 201 | 196 | 192 | 189 | 210 | 210 | 210 | 210 | 210 | 210 | 210 |
| SSH-8 | 10" | 2 nails | 97 | B | 202 | 194 | 188 | 183 | 178 | 172 | 168 | 210 | 210 | 210 | 210 | 210 | 210 | 210 |
| | | | | C | 166 | 161 | 158 | 154 | 150 | 146 | 144 | 210 | 210 | 210 | 210 | 206 | 201 | 198 |
| | | | | D | 151 | 147 | 144 | 142 | 138 | 136 | 134 | 207 | 202 | 199 | 195 | 190 | 187 | 184 |
| SSH-9 | 10" | 4 nails | 174 | B | 210 | 210 | 210 | 210 | 210 | 210 | 210 | 210 | 210 | 210 | 210 | 210 | 210 | 210 |
| | | | | C | 210 | 210 | 210 | 207 | 201 | 196 | 193 | 210 | 210 | 210 | 210 | 210 | 210 | 210 |
| | | | | D | 202 | 197 | 193 | 190 | 185 | 182 | 179 | 210 | 210 | 210 | 210 | 210 | 210 | 210 |
| SSH-10 | 9-10" | 2 screws | 222 | B | 210 | 210 | 210 | 210 | 210 | 210 | 210 | 210 | 210 | 210 | 210 | 210 | 210 | 210 |
| | | | | C | 210 | 210 | 210 | 210 | 210 | 210 | 210 | 210 | 210 | 210 | 210 | 210 | 210 | 210 |
| | | | | D | 210 | 210 | 210 | 210 | 209 | 205 | 202 | 210 | 210 | 210 | 210 | 210 | 210 | 210 |
| **GABLE ROOFS (SLOPE 6.2:12 – 12:12)** | | | | | | | | | | | | | | | | | | |
| SSH-6 | 9" | 2 nails | 118 | B | 210 | 210 | 210 | 210 | 210 | 207 | 202 | 210 | 210 | 210 | 210 | 210 | 210 | 210 |
| | | | | C | 199 | 194 | 189 | 186 | 180 | 176 | 173 | 210 | 210 | 210 | 210 | 210 | 205 | 201 |
| | | | | D | 181 | 177 | 174 | 171 | 166 | 163 | 160 | 210 | 206 | 202 | 198 | 193 | 190 | 187 |
| SSH-7 | 9" | 4 nails | 195 | B | 210 | 210 | 210 | 210 | 210 | 210 | 210 | 210 | 210 | 210 | 210 | 210 | 210 | 210 |
| | | | | C | 210 | 210 | 210 | 210 | 210 | 210 | 210 | 210 | 210 | 210 | 210 | 210 | 210 | 210 |
| | | | | D | 210 | 210 | 210 | 210 | 210 | 209 | 206 | 210 | 210 | 210 | 210 | 210 | 210 | 210 |
| SSH-8 | 10" | 2 nails | 97 | B | 210 | 210 | 205 | 199 | 194 | 187 | 183 | 210 | 210 | 210 | 210 | 210 | 210 | 210 |
| | | | | C | 181 | 176 | 172 | 168 | 163 | 159 | 157 | 210 | 204 | 200 | 196 | 190 | 186 | 182 |
| | | | | D | 164 | 160 | 157 | 155 | 151 | 148 | 145 | 191 | 186 | 183 | 180 | 175 | 172 | 169 |
| SSH-9 | 10" | 4 nails | 174 | B | 210 | 210 | 210 | 210 | 210 | 210 | 210 | 210 | 210 | 210 | 210 | 210 | 210 | 210 |
| | | | | C | 210 | 210 | 210 | 210 | 210 | 210 | 210 | 210 | 210 | 210 | 210 | 210 | 210 | 210 |
| | | | | D | 210 | 210 | 210 | 207 | 202 | 198 | 195 | 210 | 210 | 210 | 210 | 210 | 210 | 210 |
| SSH-10 | 9-10" | 2 screws | 222 | B | 210 | 210 | 210 | 210 | 210 | 210 | 210 | 210 | 210 | 210 | 210 | 210 | 210 | 210 |
| | | | | C | 210 | 210 | 210 | 210 | 210 | 210 | 210 | 210 | 210 | 210 | 210 | 210 | 210 | 210 |
| | | | | D | 210 | 210 | 210 | 210 | 210 | 210 | 210 | 210 | 210 | 210 | 210 | 210 | 210 | 210 |
| ROOF OVERHANG REDUCTION FACTOR[11] | | | | | 0.85 | | | | | | | 0.79 | | | | | | |

**See *Table C4. 1* on page *28* for assembly details, and *General Notes for APPENDIX C2* – APPENDIX C8 on page *13* for referenced superscript table notes.**


www.bocaengineering.com BOCA ENGINEERING CO. info@bocaengineering.com
Greater Victoria Area: (250) 477-7777 203-1001 Cloverdale Ave., Victoria BC V8X 4C9
Metro Vancouver: (604) 385-5210 1567 Brearley St., White Rock BC V4B 3M6

**Table C4. 5: Select Shake Maximum Wind Speeds of Hip Roof Cladding – 2026 FBC (HVHZ & Non-HVHZ); 2025 CBC; 2024 & 2021 IBC |1/2" PLYWOOD|**

| System No.[1] | Max Shingle Exposure | Shingle Fastener[4] | Allowable Pressure (psf) (ASD)[5,6] | Exposure Category[7] | ZONE 2/3 (CORNER/EDGE)[8] Maximum Wind Speed $V_{ult}$ (mph)[9,10,11] Building Height (ft)[12,13] | | | | | | | ZONE 1 (FIELD)[8] Maximum Wind Speed $V_{ult}$ (mph)[9,10,11] Building Height (ft)[12,13] | | | | | | |
|---|---|---|---|---|---|---|---|---|---|---|---|---|---|---|---|---|---|---|
| | | | | | 15 | 20 | 25 | 30 | 40 | 50 | 60 | 15 | 20 | 25 | 30 | 40 | 50 | 60 |
| **HIP ROOFS (SLOPE 3:12 – 4.4:12)** | | | | | | | | | | | | | | | | | | |
| SSH-6 | 9" | 2 nails | 118 | B | 210 | 210 | 210 | 210 | 210 | 203 | 198 | 210 | 210 | 210 | 210 | 210 | 210 | 210 |
| | | | | C | 196 | 190 | 186 | 182 | 177 | 173 | 170 | 210 | 210 | 210 | 210 | 210 | 205 | 201 |
| | | | | D | 178 | 174 | 170 | 167 | 163 | 160 | 158 | 210 | 206 | 202 | 198 | 193 | 190 | 187 |
| SSH-7 | 9" | 4 nails | 195 | B | 210 | 210 | 210 | 210 | 210 | 210 | 210 | 210 | 210 | 210 | 210 | 210 | 210 | 210 |
| | | | | C | 210 | 210 | 210 | 210 | 210 | 210 | 210 | 210 | 210 | 210 | 210 | 210 | 210 | 210 |
| | | | | D | 210 | 210 | 210 | 210 | 210 | 206 | 203 | 210 | 210 | 210 | 210 | 210 | 210 | 210 |
| SSH-8 | 10" | 2 nails | 97 | B | 210 | 208 | 201 | 195 | 190 | 184 | 179 | 210 | 210 | 210 | 210 | 210 | 210 | 210 |
| | | | | C | 177 | 172 | 169 | 165 | 160 | 157 | 154 | 210 | 204 | 200 | 196 | 190 | 186 | 182 |
| | | | | D | 161 | 157 | 154 | 152 | 148 | 145 | 143 | 191 | 186 | 183 | 180 | 175 | 172 | 169 |
| SSH-9 | 10" | 4 nails | 174 | B | 210 | 210 | 210 | 210 | 210 | 210 | 210 | 210 | 210 | 210 | 210 | 210 | 210 | 210 |
| | | | | C | 210 | 210 | 210 | 210 | 210 | 210 | 206 | 210 | 210 | 210 | 210 | 210 | 210 | 210 |
| | | | | D | 210 | 210 | 207 | 203 | 198 | 194 | 191 | 210 | 210 | 210 | 210 | 210 | 210 | 210 |
| SSH-10 | 9-10" | 2 screws | 222 | B | 210 | 210 | 210 | 210 | 210 | 210 | 210 | 210 | 210 | 210 | 210 | 210 | 210 | 210 |
| | | | | C | 210 | 210 | 210 | 210 | 210 | 210 | 210 | 210 | 210 | 210 | 210 | 210 | 210 | 210 |
| | | | | D | 210 | 210 | 210 | 210 | 210 | 210 | 210 | 210 | 210 | 210 | 210 | 210 | 210 | 210 |
| **HIP ROOFS (SLOPE 4.5:12 – 6.1:12)** | | | | | | | | | | | | | | | | | | |
| SSH-6 | 9" | 2 nails | 118 | B | 210 | 210 | 210 | 210 | 210 | 210 | 210 | 210 | 210 | 210 | 210 | 210 | 210 | 210 |
| | | | | C | 210 | 210 | 210 | 206 | 200 | 195 | 192 | 210 | 210 | 210 | 210 | 210 | 210 | 210 |
| | | | | D | 201 | 196 | 192 | 189 | 184 | 181 | 178 | 210 | 210 | 210 | 210 | 210 | 210 | 209 |
| SSH-7 | 9" | 4 nails | 195 | B | 210 | 210 | 210 | 210 | 210 | 210 | 210 | 210 | 210 | 210 | 210 | 210 | 210 | 210 |
| | | | | C | 210 | 210 | 210 | 210 | 210 | 210 | 210 | 210 | 210 | 210 | 210 | 210 | 210 | 210 |
| | | | | D | 210 | 210 | 210 | 210 | 210 | 210 | 210 | 210 | 210 | 210 | 210 | 210 | 210 | 210 |
| SSH-8 | 10" | 2 nails | 97 | B | 210 | 210 | 210 | 210 | 210 | 208 | 203 | 210 | 210 | 210 | 210 | 210 | 210 | 210 |
| | | | | C | 200 | 195 | 190 | 186 | 181 | 177 | 174 | 210 | 210 | 210 | 210 | 210 | 208 | 204 |
| | | | | D | 182 | 178 | 174 | 171 | 167 | 164 | 161 | 210 | 209 | 205 | 201 | 196 | 192 | 189 |
| SSH-9 | 10" | 4 nails | 174 | B | 210 | 210 | 210 | 210 | 210 | 210 | 210 | 210 | 210 | 210 | 210 | 210 | 210 | 210 |
| | | | | C | 210 | 210 | 210 | 210 | 210 | 210 | 210 | 210 | 210 | 210 | 210 | 210 | 210 | 210 |
| | | | | D | 210 | 210 | 210 | 210 | 210 | 210 | 210 | 210 | 210 | 210 | 210 | 210 | 210 | 210 |
| SSH-10 | 9-10" | 2 screws | 222 | B | 210 | 210 | 210 | 210 | 210 | 210 | 210 | 210 | 210 | 210 | 210 | 210 | 210 | 210 |
| | | | | C | 210 | 210 | 210 | 210 | 210 | 210 | 210 | 210 | 210 | 210 | 210 | 210 | 210 | 210 |
| | | | | D | 210 | 210 | 210 | 210 | 210 | 210 | 210 | 210 | 210 | 210 | 210 | 210 | 210 | 210 |
| **HIP ROOFS (SLOPE 6.2:12 – 12:12)** | | | | | | | | | | | | | | | | | | |
| SSH-6 | 9" | 2 nails | 118 | B | 210 | 210 | 210 | 210 | 210 | 210 | 205 | 210 | 210 | 210 | 210 | 210 | 210 | 210 |
| | | | | C | 203 | 197 | 193 | 189 | 184 | 179 | 176 | 210 | 210 | 210 | 210 | 210 | 210 | 210 |
| | | | | D | 184 | 180 | 177 | 174 | 169 | 166 | 164 | 210 | 210 | 210 | 210 | 210 | 206 | 203 |
| SSH-7 | 9" | 4 nails | 195 | B | 210 | 210 | 210 | 210 | 210 | 210 | 210 | 210 | 210 | 210 | 210 | 210 | 210 | 210 |
| | | | | C | 210 | 210 | 210 | 210 | 210 | 210 | 210 | 210 | 210 | 210 | 210 | 210 | 210 | 210 |
| | | | | D | 210 | 210 | 210 | 210 | 210 | 210 | 210 | 210 | 210 | 210 | 210 | 210 | 210 | 210 |
| SSH-8 | 10" | 2 nails | 97 | B | 210 | 210 | 209 | 203 | 197 | 191 | 186 | 210 | 210 | 210 | 210 | 210 | 210 | 210 |
| | | | | C | 184 | 179 | 175 | 171 | 166 | 163 | 160 | 210 | 210 | 210 | 210 | 206 | 201 | 198 |
| | | | | D | 167 | 163 | 160 | 158 | 154 | 151 | 148 | 207 | 202 | 199 | 195 | 190 | 187 | 184 |
| SSH-9 | 10" | 4 nails | 174 | B | 210 | 210 | 210 | 210 | 210 | 210 | 210 | 210 | 210 | 210 | 210 | 210 | 210 | 210 |
| | | | | C | 210 | 210 | 210 | 210 | 210 | 210 | 210 | 210 | 210 | 210 | 210 | 210 | 210 | 210 |
| | | | | D | 210 | 210 | 210 | 210 | 206 | 202 | 199 | 210 | 210 | 210 | 210 | 210 | 210 | 210 |
| SSH-10 | 9-10" | 2 screws | 222 | B | 210 | 210 | 210 | 210 | 210 | 210 | 210 | 210 | 210 | 210 | 210 | 210 | 210 | 210 |
| | | | | C | 210 | 210 | 210 | 210 | 210 | 210 | 210 | 210 | 210 | 210 | 210 | 210 | 210 | 210 |
| | | | | D | 210 | 210 | 210 | 210 | 210 | 210 | 210 | 210 | 210 | 210 | 210 | 210 | 210 | 210 |
| ROOF OVERHANG REDUCTION FACTOR[11] | | | | | 0.83 | | | | | | | N/A | | | | | | |

**See *Table C4. 1* on page *28* for assembly details, and *General Notes for APPENDIX C2* – APPENDIX C8 on page *13* for referenced superscript table notes.**

**Table C4. 6: Select Shake Maximum Wind Speeds of Gable Roof Cladding – 2026 FBC (HVHZ & Non-HVHZ); 2025 CBC; 2024 & 2021 IBC |5/8" PLYWOOD|**

| System No.[1] | Max Shingle Exposure | Shingle Fastener[4] | Allowable Pressure (psf) (ASD)[5,6] | Exposure Category[7] | ZONE 2/3 (CORNER/EDGE)[8] Maximum Wind Speed $V_{ult}$ (mph)[9,10,11] Building Height (ft)[12,13] | | | | | | | ZONE 1 (FIELD)[8] Maximum Wind Speed $V_{ult}$ (mph)[9,10,11] Building Height (ft)[12,13] | | | | | | |
|---|---|---|---|---|---|---|---|---|---|---|---|---|---|---|---|---|---|---|
| | | | | | 15 | 20 | 25 | 30 | 40 | 50 | 60 | 15 | 20 | 25 | 30 | 40 | 50 | 60 |
| **GABLE ROOFS (SLOPE 3:12 – 4.4:12)** | | | | | | | | | | | | | | | | | | |
| SSH-11 | 9" | 2 nails | 140 | B | 210 | 210 | 207 | 201 | 196 | 189 | 185 | 210 | 210 | 210 | 210 | 210 | 210 | 210 |
| | | | | C | 183 | 178 | 174 | 170 | 165 | 161 | 158 | 210 | 210 | 210 | 210 | 210 | 210 | 209 |
| | | | | D | 166 | 162 | 159 | 156 | 152 | 149 | 147 | 210 | 210 | 210 | 206 | 201 | 197 | 194 |
| SSH-12 | 9" | 4 nails | 266 | B | 210 | 210 | 210 | 210 | 210 | 210 | 210 | 210 | 210 | 210 | 210 | 210 | 210 | 210 |
| | | | | C | 210 | 210 | 210 | 210 | 210 | 210 | 210 | 210 | 210 | 210 | 210 | 210 | 210 | 210 |
| | | | | D | 210 | 210 | 210 | 210 | 210 | 206 | 203 | 210 | 210 | 210 | 210 | 210 | 210 | 210 |
| SSH-13 | 10" | 2 nails | 141 | B | 210 | 210 | 208 | 202 | 196 | 190 | 186 | 210 | 210 | 210 | 210 | 210 | 210 | 210 |
| | | | | C | 183 | 178 | 174 | 171 | 166 | 162 | 159 | 210 | 210 | 210 | 210 | 210 | 210 | 209 |
| | | | | D | 167 | 163 | 160 | 157 | 153 | 150 | 148 | 210 | 210 | 210 | 207 | 202 | 198 | 194 |
| SSH-14 | 10" | 4 nails | 245 | B | 210 | 210 | 210 | 210 | 210 | 210 | 210 | 210 | 210 | 210 | 210 | 210 | 210 | 210 |
| | | | | C | 210 | 210 | 210 | 210 | 210 | 210 | 210 | 210 | 210 | 210 | 210 | 210 | 210 | 210 |
| | | | | D | 210 | 210 | 210 | 207 | 202 | 198 | 195 | 210 | 210 | 210 | 210 | 210 | 210 | 210 |
| SSH-15 | 9-10" | 2 screws | 222 | B | 210 | 210 | 210 | 210 | 210 | 210 | 210 | 210 | 210 | 210 | 210 | 210 | 210 | 210 |
| | | | | C | 210 | 210 | 210 | 210 | 208 | 203 | 200 | 210 | 210 | 210 | 210 | 210 | 210 | 210 |
| | | | | D | 209 | 204 | 200 | 197 | 192 | 188 | 185 | 210 | 210 | 210 | 210 | 210 | 210 | 210 |
| **GABLE ROOFS (SLOPE 4.5:12 – 6.1:12)** | | | | | | | | | | | | | | | | | | |
| SSH-11 | 9" | 2 nails | 140 | B | 210 | 210 | 210 | 210 | 210 | 207 | 202 | 210 | 210 | 210 | 210 | 210 | 210 | 210 |
| | | | | C | 199 | 194 | 189 | 185 | 180 | 176 | 173 | 210 | 210 | 210 | 210 | 210 | 210 | 210 |
| | | | | D | 181 | 177 | 174 | 170 | 166 | 163 | 160 | 210 | 210 | 210 | 210 | 210 | 210 | 210 |
| SSH-12 | 9" | 4 nails | 266 | B | 210 | 210 | 210 | 210 | 210 | 210 | 210 | 210 | 210 | 210 | 210 | 210 | 210 | 210 |
| | | | | C | 210 | 210 | 210 | 210 | 210 | 210 | 210 | 210 | 210 | 210 | 210 | 210 | 210 | 210 |
| | | | | D | 210 | 210 | 210 | 210 | 210 | 210 | 210 | 210 | 210 | 210 | 210 | 210 | 210 | 210 |
| SSH-13 | 10" | 2 nails | 141 | B | 210 | 210 | 210 | 210 | 210 | 207 | 202 | 210 | 210 | 210 | 210 | 210 | 210 | 210 |
| | | | | C | 200 | 194 | 190 | 186 | 181 | 177 | 173 | 210 | 210 | 210 | 210 | 210 | 210 | 210 |
| | | | | D | 182 | 177 | 174 | 171 | 167 | 164 | 161 | 210 | 210 | 210 | 210 | 210 | 210 | 210 |
| SSH-14 | 10" | 4 nails | 245 | B | 210 | 210 | 210 | 210 | 210 | 210 | 210 | 210 | 210 | 210 | 210 | 210 | 210 | 210 |
| | | | | C | 210 | 210 | 210 | 210 | 210 | 210 | 210 | 210 | 210 | 210 | 210 | 210 | 210 | 210 |
| | | | | D | 210 | 210 | 210 | 210 | 210 | 210 | 210 | 210 | 210 | 210 | 210 | 210 | 210 | 210 |
| SSH-15 | 9-10" | 2 screws | 222 | B | 210 | 210 | 210 | 210 | 210 | 210 | 210 | 210 | 210 | 210 | 210 | 210 | 210 | 210 |
| | | | | C | 210 | 210 | 210 | 210 | 210 | 210 | 210 | 210 | 210 | 210 | 210 | 210 | 210 | 210 |
| | | | | D | 210 | 210 | 210 | 210 | 209 | 205 | 202 | 210 | 210 | 210 | 210 | 210 | 210 | 210 |
| **GABLE ROOFS (SLOPE 6.2:12 – 12:12)** | | | | | | | | | | | | | | | | | | |
| SSH-11 | 9" | 2 nails | 140 | B | 210 | 210 | 210 | 210 | 210 | 210 | 210 | 210 | 210 | 210 | 210 | 210 | 210 | 210 |
| | | | | C | 210 | 210 | 206 | 202 | 196 | 192 | 188 | 210 | 210 | 210 | 210 | 210 | 210 | 210 |
| | | | | D | 197 | 192 | 189 | 186 | 181 | 177 | 175 | 210 | 210 | 210 | 210 | 210 | 207 | 203 |
| SSH-12 | 9" | 4 nails | 266 | B | 210 | 210 | 210 | 210 | 210 | 210 | 210 | 210 | 210 | 210 | 210 | 210 | 210 | 210 |
| | | | | C | 210 | 210 | 210 | 210 | 210 | 210 | 210 | 210 | 210 | 210 | 210 | 210 | 210 | 210 |
| | | | | D | 210 | 210 | 210 | 210 | 210 | 210 | 210 | 210 | 210 | 210 | 210 | 210 | 210 | 210 |
| SSH-13 | 10" | 2 nails | 141 | B | 210 | 210 | 210 | 210 | 210 | 210 | 210 | 210 | 210 | 210 | 210 | 210 | 210 | 210 |
| | | | | C | 210 | 210 | 207 | 203 | 197 | 192 | 189 | 210 | 210 | 210 | 210 | 210 | 210 | 210 |
| | | | | D | 198 | 193 | 190 | 186 | 182 | 178 | 175 | 210 | 210 | 210 | 210 | 210 | 207 | 204 |
| SSH-14 | 10" | 4 nails | 245 | B | 210 | 210 | 210 | 210 | 210 | 210 | 210 | 210 | 210 | 210 | 210 | 210 | 210 | 210 |
| | | | | C | 210 | 210 | 210 | 210 | 210 | 210 | 210 | 210 | 210 | 210 | 210 | 210 | 210 | 210 |
| | | | | D | 210 | 210 | 210 | 210 | 210 | 210 | 210 | 210 | 210 | 210 | 210 | 210 | 210 | 210 |
| SSH-15 | 9-10" | 2 screws | 222 | B | 210 | 210 | 210 | 210 | 210 | 210 | 210 | 210 | 210 | 210 | 210 | 210 | 210 | 210 |
| | | | | C | 210 | 210 | 210 | 210 | 210 | 210 | 210 | 210 | 210 | 210 | 210 | 210 | 210 | 210 |
| | | | | D | 210 | 210 | 210 | 210 | 210 | 210 | 210 | 210 | 210 | 210 | 210 | 210 | 210 | 210 |
| ROOF OVERHANG REDUCTION FACTOR[11] | | | | | 0.85 | | | | | | | 0.79 | | | | | | |

**See *Table C4. 1* on page *28* for assembly details, and *General Notes for APPENDIX C2* – APPENDIX C8 on page *13* for referenced superscript table notes.**

**Table C4. 7: Select Shake Maximum Wind Speeds of Hip Roof Cladding – 2026 FBC (HVHZ & Non-HVHZ); 2025 CBC; 2024 & 2021 IBC |5/8" PLYWOOD|**

| System No.[1] | Max Shingle Exposure | Shingle Fastener[4] | Allowable Pressure (psf) (ASD)[5,6] | Exposure Category[7] | ZONE 2/3 (CORNER/EDGE)[8] Maximum Wind Speed $V_{ult}$ (mph)[9,10,11] Building Height (ft)[12,13] | | | | | | | ZONE 1 (FIELD)[8] Maximum Wind Speed $V_{ult}$ (mph)[9,10,11] Building Height (ft)[12,13] | | | | | | |
|---|---|---|---|---|---|---|---|---|---|---|---|---|---|---|---|---|---|---|
| | | | | | 15 | 20 | 25 | 30 | 40 | 50 | 60 | 15 | 20 | 25 | 30 | 40 | 50 | 60 |
| **HIP ROOFS (SLOPE 3:12 – 4.4:12)** | | | | | | | | | | | | | | | | | | |
| SSH-11 | 9" | 2 nails | 140 | B | 210 | 210 | 210 | 210 | 210 | 210 | 210 | 210 | 210 | 210 | 210 | 210 | 210 | 210 |
| | | | | C | 210 | 207 | 203 | 198 | 193 | 188 | 185 | 210 | 210 | 210 | 210 | 210 | 210 | 210 |
| | | | | D | 194 | 189 | 186 | 182 | 178 | 174 | 172 | 210 | 210 | 210 | 210 | 210 | 207 | 203 |
| SSH-12 | 9" | 4 nails | 266 | B | 210 | 210 | 210 | 210 | 210 | 210 | 210 | 210 | 210 | 210 | 210 | 210 | 210 | 210 |
| | | | | C | 210 | 210 | 210 | 210 | 210 | 210 | 210 | 210 | 210 | 210 | 210 | 210 | 210 | 210 |
| | | | | D | 210 | 210 | 210 | 210 | 210 | 210 | 210 | 210 | 210 | 210 | 210 | 210 | 210 | 210 |
| SSH-13 | 10" | 2 nails | 141 | B | 210 | 210 | 210 | 210 | 210 | 210 | 210 | 210 | 210 | 210 | 210 | 210 | 210 | 210 |
| | | | | C | 210 | 208 | 203 | 199 | 193 | 189 | 185 | 210 | 210 | 210 | 210 | 210 | 210 | 210 |
| | | | | D | 194 | 190 | 186 | 183 | 178 | 175 | 172 | 210 | 210 | 210 | 210 | 210 | 207 | 204 |
| SSH-14 | 10" | 4 nails | 245 | B | 210 | 210 | 210 | 210 | 210 | 210 | 210 | 210 | 210 | 210 | 210 | 210 | 210 | 210 |
| | | | | C | 210 | 210 | 210 | 210 | 210 | 210 | 210 | 210 | 210 | 210 | 210 | 210 | 210 | 210 |
| | | | | D | 210 | 210 | 210 | 210 | 210 | 210 | 210 | 210 | 210 | 210 | 210 | 210 | 210 | 210 |
| SSH-15 | 9-10" | 2 screws | 222 | B | 210 | 210 | 210 | 210 | 210 | 210 | 210 | 210 | 210 | 210 | 210 | 210 | 210 | 210 |
| | | | | C | 210 | 210 | 210 | 210 | 210 | 210 | 210 | 210 | 210 | 210 | 210 | 210 | 210 | 210 |
| | | | | D | 210 | 210 | 210 | 210 | 210 | 210 | 210 | 210 | 210 | 210 | 210 | 210 | 210 | 210 |
| **HIP ROOFS (SLOPE 4.5:12 – 6.1:12)** | | | | | | | | | | | | | | | | | | |
| SSH-11 | 9" | 2 nails | 140 | B | 210 | 210 | 210 | 210 | 210 | 210 | 210 | 210 | 210 | 210 | 210 | 210 | 210 | 210 |
| | | | | C | 210 | 210 | 210 | 210 | 210 | 210 | 209 | 210 | 210 | 210 | 210 | 210 | 210 | 210 |
| | | | | D | 210 | 210 | 210 | 206 | 201 | 197 | 194 | 210 | 210 | 210 | 210 | 210 | 210 | 210 |
| SSH-12 | 9" | 4 nails | 266 | B | 210 | 210 | 210 | 210 | 210 | 210 | 210 | 210 | 210 | 210 | 210 | 210 | 210 | 210 |
| | | | | C | 210 | 210 | 210 | 210 | 210 | 210 | 210 | 210 | 210 | 210 | 210 | 210 | 210 | 210 |
| | | | | D | 210 | 210 | 210 | 210 | 210 | 210 | 210 | 210 | 210 | 210 | 210 | 210 | 210 | 210 |
| SSH-13 | 10" | 2 nails | 141 | B | 210 | 210 | 210 | 210 | 210 | 210 | 210 | 210 | 210 | 210 | 210 | 210 | 210 | 210 |
| | | | | C | 210 | 210 | 210 | 210 | 210 | 210 | 209 | 210 | 210 | 210 | 210 | 210 | 210 | 210 |
| | | | | D | 210 | 210 | 210 | 207 | 202 | 198 | 194 | 210 | 210 | 210 | 210 | 210 | 210 | 210 |
| SSH-14 | 10" | 4 nails | 245 | B | 210 | 210 | 210 | 210 | 210 | 210 | 210 | 210 | 210 | 210 | 210 | 210 | 210 | 210 |
| | | | | C | 210 | 210 | 210 | 210 | 210 | 210 | 210 | 210 | 210 | 210 | 210 | 210 | 210 | 210 |
| | | | | D | 210 | 210 | 210 | 210 | 210 | 210 | 210 | 210 | 210 | 210 | 210 | 210 | 210 | 210 |
| SSH-15 | 9-10" | 2 screws | 222 | B | 210 | 210 | 210 | 210 | 210 | 210 | 210 | 210 | 210 | 210 | 210 | 210 | 210 | 210 |
| | | | | C | 210 | 210 | 210 | 210 | 210 | 210 | 210 | 210 | 210 | 210 | 210 | 210 | 210 | 210 |
| | | | | D | 210 | 210 | 210 | 210 | 210 | 210 | 210 | 210 | 210 | 210 | 210 | 210 | 210 | 210 |
| **HIP ROOFS (SLOPE 6.2:12 – 12:12)** | | | | | | | | | | | | | | | | | | |
| SSH-11 | 9" | 2 nails | 140 | B | 210 | 210 | 210 | 210 | 210 | 210 | 210 | 210 | 210 | 210 | 210 | 210 | 210 | 210 |
| | | | | C | 210 | 210 | 210 | 206 | 200 | 195 | 192 | 210 | 210 | 210 | 210 | 210 | 210 | 210 |
| | | | | D | 201 | 196 | 193 | 189 | 185 | 181 | 178 | 210 | 210 | 210 | 210 | 210 | 210 | 210 |
| SSH-12 | 9" | 4 nails | 266 | B | 210 | 210 | 210 | 210 | 210 | 210 | 210 | 210 | 210 | 210 | 210 | 210 | 210 | 210 |
| | | | | C | 210 | 210 | 210 | 210 | 210 | 210 | 210 | 210 | 210 | 210 | 210 | 210 | 210 | 210 |
| | | | | D | 210 | 210 | 210 | 210 | 210 | 210 | 210 | 210 | 210 | 210 | 210 | 210 | 210 | 210 |
| SSH-13 | 10" | 2 nails | 141 | B | 210 | 210 | 210 | 210 | 210 | 210 | 210 | 210 | 210 | 210 | 210 | 210 | 210 | 210 |
| | | | | C | 210 | 210 | 210 | 207 | 201 | 196 | 192 | 210 | 210 | 210 | 210 | 210 | 210 | 210 |
| | | | | D | 202 | 197 | 193 | 190 | 185 | 182 | 179 | 210 | 210 | 210 | 210 | 210 | 210 | 210 |
| SSH-14 | 10" | 4 nails | 245 | B | 210 | 210 | 210 | 210 | 210 | 210 | 210 | 210 | 210 | 210 | 210 | 210 | 210 | 210 |
| | | | | C | 210 | 210 | 210 | 210 | 210 | 210 | 210 | 210 | 210 | 210 | 210 | 210 | 210 | 210 |
| | | | | D | 210 | 210 | 210 | 210 | 210 | 210 | 210 | 210 | 210 | 210 | 210 | 210 | 210 | 210 |
| SSH-15 | 9-10" | 2 screws | 222 | B | 210 | 210 | 210 | 210 | 210 | 210 | 210 | 210 | 210 | 210 | 210 | 210 | 210 | 210 |
| | | | | C | 210 | 210 | 210 | 210 | 210 | 210 | 210 | 210 | 210 | 210 | 210 | 210 | 210 | 210 |
| | | | | D | 210 | 210 | 210 | 210 | 210 | 210 | 210 | 210 | 210 | 210 | 210 | 210 | 210 | 210 |
| ROOF OVERHANG REDUCTION FACTOR[11] | | | | | 0.83 | | | | | | | N/A | | | | | | |

**See *Table C4. 1* on page *28* for assembly details, and *General Notes for APPENDIX C2* – APPENDIX C8 on page *13* for referenced superscript table notes.**

## APPENDIX C5: FANCY SHAKE (FSH) WIND PRESSURE & WIND SPEED TABLES

**Table C5. 1: Fancy Shake Assembly Configurations**

| System No.[1] | Min Sheathing[2,3] | Max Shingle Exposure | Shingle Fasteners[4] | Allowable Pressure[5,6] (psf)(ASD) |
|---|---|---|---|---|
| **FSH-1** | 7/16" OSB | 6" FANCY | 2 nails per shingle, 11ga 1.75-inch galvanized ring-shank roofing nails | 105 |
| **FSH-2** | 7/16" OSB | 5" BEAVER/ DIAMOND | 2 nails per shingle, 11ga 1.75-inch galvanized ring-shank roofing nails | 182 |
| **FSH-3** | 1/2" Plywood | 6" FANCY | 2 nails per shingle, 11ga 1.75-inch galvanized ring-shank roofing nails | 140 |
| **FSH-4** | 1/2" Plywood | 5" BEAVER/ DIAMOND | 2 nails per shingle, 11ga 1.75-inch galvanized ring-shank roofing nails | 243 |

**See *General Notes for APPENDIX C2 – APPENDIX C8* on page *13* for referenced superscript table notes.**

Allowable Pressure (ASD) design values for max 6" exposure can be used for shingle exposures less than 6".

In accordance with the 2026 Florida Building Code (FBC), minimum 19/32-inch (5/8") plywood or wood planks must be installed for new roof deck construction in HVHZ regions.

Unless noted otherwise, the published allowable pressure (ASD) values apply to HVHZ and Non-HVHZ applications, and include a safety factor of 2.

**<WIND SPEED TABLES BEGIN NEXT PAGE>**


www.bocaengineering.com BOCA ENGINEERING CO. info@bocaengineering.com
Greater Victoria Area: (250) 477-7777 203-1001 Cloverdale Ave., Victoria BC V8X 4C9
Metro Vancouver: (604) 385-5210 1567 Brearley St., White Rock BC V4B 3M6

**Table C5. 2: Fancy Shake Maximum Wind Speeds of Gable Roof Cladding – 2026 FBC (Non-HVHZ); 2025 CBC; 2024 & 2021 IBC |7/16" OSB|**

| System No.[1] | Max Shingle Exposure | Shingle Fastener[4] | Allowable Pressure (psf) (ASD)[5,6] | Exposure Category[7] | ZONE 2/3 (CORNER/EDGE)[8] Maximum Wind Speed $V_{ult}$ (mph)[9,10,11] Building Height (ft)[12,13] | | | | | | | ZONE 1 (FIELD)[8] Maximum Wind Speed $V_{ult}$ (mph)[9,10,11] Building Height (ft)[12,13] | | | | | | |
|---|---|---|---|---|---|---|---|---|---|---|---|---|---|---|---|---|---|---|
| | | | | | 15 | 20 | 25 | 30 | 40 | 50 | 60 | 15 | 20 | 25 | 30 | 40 | 50 | 60 |
| **GABLE ROOFS (SLOPE 3:12 – 4.4:12)** | | | | | | | | | | | | | | | | | | |
| FSH-1 | 6" | 2 nails | 105 | B | 193 | 185 | 180 | 174 | 170 | 164 | 160 | 210 | 210 | 210 | 210 | 210 | 210 | 210 |
| | | | | C | 158 | 154 | 150 | 147 | 143 | 140 | 137 | 208 | 202 | 198 | 194 | 188 | 184 | 181 |
| | | | | D | 144 | 140 | 138 | 135 | 132 | 129 | 127 | 189 | 185 | 181 | 178 | 174 | 170 | 168 |
| FSH-2 | 5-6" | 2 nails | 182 | B | 210 | 210 | 210 | 210 | 210 | 210 | 210 | 210 | 210 | 210 | 210 | 210 | 210 | 210 |
| | | | | C | 208 | 202 | 198 | 194 | 188 | 184 | 181 | 210 | 210 | 210 | 210 | 210 | 210 | 210 |
| | | | | D | 189 | 185 | 181 | 178 | 174 | 170 | 168 | 210 | 210 | 210 | 210 | 210 | 210 | 210 |
| **GABLE ROOFS (SLOPE 4.5:12 – 6.1:12)** | | | | | | | | | | | | | | | | | | |
| FSH-1 | 6" | 2 nails | 105 | B | 210 | 202 | 196 | 190 | 185 | 179 | 175 | 210 | 210 | 210 | 210 | 210 | 210 | 210 |
| | | | | C | 172 | 168 | 164 | 161 | 156 | 152 | 150 | 210 | 210 | 210 | 210 | 210 | 210 | 206 |
| | | | | D | 157 | 153 | 150 | 148 | 144 | 141 | 139 | 210 | 210 | 207 | 203 | 198 | 194 | 191 |
| FSH-2 | 5-6" | 2 nails | 182 | B | 210 | 210 | 210 | 210 | 210 | 210 | 210 | 210 | 210 | 210 | 210 | 210 | 210 | 210 |
| | | | | C | 210 | 210 | 210 | 210 | 205 | 201 | 197 | 210 | 210 | 210 | 210 | 210 | 210 | 210 |
| | | | | D | 206 | 201 | 198 | 194 | 190 | 186 | 183 | 210 | 210 | 210 | 210 | 210 | 210 | 210 |
| **GABLE ROOFS (SLOPE 6.2:12 – 12:12)** | | | | | | | | | | | | | | | | | | |
| FSH-1 | 6" | 2 nails | 105 | B | 210 | 210 | 210 | 207 | 201 | 195 | 190 | 210 | 210 | 210 | 210 | 210 | 210 | 210 |
| | | | | C | 188 | 183 | 179 | 175 | 170 | 166 | 163 | 210 | 210 | 208 | 204 | 198 | 193 | 190 |
| | | | | D | 171 | 167 | 164 | 161 | 157 | 154 | 151 | 199 | 194 | 190 | 187 | 182 | 179 | 176 |
| FSH-2 | 5-6" | 2 nails | 182 | B | 210 | 210 | 210 | 210 | 210 | 210 | 210 | 210 | 210 | 210 | 210 | 210 | 210 | 210 |
| | | | | C | 210 | 210 | 210 | 210 | 210 | 210 | 210 | 210 | 210 | 210 | 210 | 210 | 210 | 210 |
| | | | | D | 210 | 210 | 210 | 210 | 206 | 202 | 199 | 210 | 210 | 210 | 210 | 210 | 210 | 210 |
| ROOF OVERHANG REDUCTION FACTOR[11] | | | | | 0.85 | | | | | | | 0.79 | | | | | | |

**Table C5. 3: Fancy Shake Maximum Wind Speeds of Hip Roof Cladding – 2026 FBC (Non-HVHZ); 2025 CBC; 2024 & 2021 IBC |7/16" OSB|**

| System No.[1] | Max Shingle Exposure | Shingle Fastener[4] | Allowable Pressure (psf) (ASD)[5,6] | Exposure Category[7] | ZONE 2/3 (CORNER/EDGE)[8] Maximum Wind Speed $V_{ult}$ (mph)[9,10,11] Building Height (ft)[12,13] | | | | | | | ZONE 1 (FIELD)[8] Maximum Wind Speed $V_{ult}$ (mph)[9,10,11] Building Height (ft)[12,13] | | | | | | |
|---|---|---|---|---|---|---|---|---|---|---|---|---|---|---|---|---|---|---|
| | | | | | 15 | 20 | 25 | 30 | 40 | 50 | 60 | 15 | 20 | 25 | 30 | 40 | 50 | 60 |
| **HIP ROOFS (SLOPE 3:12 – 4.4:12)** | | | | | | | | | | | | | | | | | | |
| FSH-1 | 6" | 2 nails | 105 | B | 210 | 210 | 209 | 203 | 198 | 191 | 187 | 210 | 210 | 210 | 210 | 210 | 210 | 210 |
| | | | | C | 184 | 179 | 175 | 172 | 167 | 163 | 160 | 210 | 210 | 208 | 204 | 198 | 193 | 190 |
| | | | | D | 168 | 164 | 161 | 158 | 154 | 151 | 149 | 199 | 194 | 190 | 187 | 182 | 179 | 176 |
| FSH-2 | 5-6" | 2 nails | 182 | B | 210 | 210 | 210 | 210 | 210 | 210 | 210 | 210 | 210 | 210 | 210 | 210 | 210 | 210 |
| | | | | C | 210 | 210 | 210 | 210 | 210 | 210 | 210 | 210 | 210 | 210 | 210 | 210 | 210 | 210 |
| | | | | D | 210 | 210 | 210 | 208 | 203 | 199 | 196 | 210 | 210 | 210 | 210 | 210 | 210 | 210 |
| **HIP ROOFS (SLOPE 4.5:12 – 6.1:12)** | | | | | | | | | | | | | | | | | | |
| FSH-1 | 6" | 2 nails | 105 | B | 210 | 210 | 210 | 210 | 210 | 210 | 210 | 210 | 210 | 210 | 210 | 210 | 210 | 210 |
| | | | | C | 208 | 202 | 198 | 194 | 188 | 184 | 181 | 210 | 210 | 210 | 210 | 210 | 210 | 210 |
| | | | | D | 189 | 185 | 181 | 178 | 174 | 170 | 168 | 210 | 210 | 210 | 209 | 204 | 200 | 197 |
| FSH-2 | 5-6" | 2 nails | 182 | B | 210 | 210 | 210 | 210 | 210 | 210 | 210 | 210 | 210 | 210 | 210 | 210 | 210 | 210 |
| | | | | C | 210 | 210 | 210 | 210 | 210 | 210 | 210 | 210 | 210 | 210 | 210 | 210 | 210 | 210 |
| | | | | D | 210 | 210 | 210 | 210 | 210 | 210 | 210 | 210 | 210 | 210 | 210 | 210 | 210 | 210 |
| **HIP ROOFS (SLOPE 6.2:12 – 12:12)** | | | | | | | | | | | | | | | | | | |
| FSH-1 | 6" | 2 nails | 105 | B | 210 | 210 | 210 | 210 | 205 | 199 | 194 | 210 | 210 | 210 | 210 | 210 | 210 | 210 |
| | | | | C | 192 | 186 | 182 | 178 | 173 | 169 | 166 | 210 | 210 | 210 | 210 | 210 | 210 | 206 |
| | | | | D | 174 | 170 | 167 | 164 | 160 | 157 | 154 | 210 | 210 | 207 | 203 | 198 | 194 | 191 |
| FSH-2 | 5-6" | 2 nails | 182 | B | 210 | 210 | 210 | 210 | 210 | 210 | 210 | 210 | 210 | 210 | 210 | 210 | 210 | 210 |
| | | | | C | 210 | 210 | 210 | 210 | 210 | 210 | 210 | 210 | 210 | 210 | 210 | 210 | 210 | 210 |
| | | | | D | 210 | 210 | 210 | 210 | 210 | 206 | 203 | 210 | 210 | 210 | 210 | 210 | 210 | 210 |
| ROOF OVERHANG REDUCTION FACTOR[11] | | | | | 0.83 | | | | | | | N/A | | | | | | |

***See Table C5. 1 on* page *35* for assembly details, and *General Notes for APPENDIX C2* – APPENDIX C8 on page *13* for referenced superscript table notes.**



www.bocaengineering.com BOCA ENGINEERING CO. info@bocaengineering.com
Greater Victoria Area: (250) 477-7777 203-1001 Cloverdale Ave., Victoria BC V8X 4C9
Metro Vancouver: (604) 385-5210 1567 Brearley St., White Rock BC V4B 3M6

**Table C5. 4: Fancy Shake Maximum Wind Speeds of Gable Roof Cladding – 2026 FBC (HVHZ & Non-HVHZ); 2025 CBC; 2024 & 2021 IBC |1/2" PLYWOOD|**

| System No.[1] | Max Shingle Exposure | Shingle Fastener[4] | Allowable Pressure (psf) (ASD)[5,6] | Exposure Category[7] | ZONE 2/3 (CORNER/EDGE)[8] Maximum Wind Speed $V_{ult}$ (mph)[9,10,11] Building Height (ft)[12,13] | | | | | | | ZONE 1 (FIELD)[8] Maximum Wind Speed $V_{ult}$ (mph)[9,10,11] Building Height (ft)[12,13] | | | | | | |
|---|---|---|---|---|---|---|---|---|---|---|---|---|---|---|---|---|---|---|
| | | | | | 15 | 20 | 25 | 30 | 40 | 50 | 60 | 15 | 20 | 25 | 30 | 40 | 50 | 60 |
| **GABLE ROOFS (SLOPE 3:12 – 4.4:12)** | | | | | | | | | | | | | | | | | | |
| FSH-3 | 6" | 2 nails | 140 | B | 210 | 210 | 207 | 201 | 196 | 189 | 185 | 210 | 210 | 210 | 210 | 210 | 210 | 210 |
| | | | | C | 183 | 178 | 174 | 170 | 165 | 161 | 158 | 210 | 210 | 210 | 210 | 210 | 210 | 209 |
| | | | | D | 166 | 162 | 159 | 156 | 152 | 149 | 147 | 210 | 210 | 210 | 206 | 201 | 197 | 194 |
| FSH-4 | 5-6" | 2 nails | 243 | B | 210 | 210 | 210 | 210 | 210 | 210 | 210 | 210 | 210 | 210 | 210 | 210 | 210 | 210 |
| | | | | C | 210 | 210 | 210 | 210 | 210 | 210 | 209 | 210 | 210 | 210 | 210 | 210 | 210 | 210 |
| | | | | D | 210 | 210 | 210 | 206 | 201 | 197 | 194 | 210 | 210 | 210 | 210 | 210 | 210 | 210 |
| **GABLE ROOFS (SLOPE 4.5:12 – 6.1:12)** | | | | | | | | | | | | | | | | | | |
| FSH-3 | 6" | 2 nails | 140 | B | 210 | 210 | 210 | 210 | 210 | 207 | 202 | 210 | 210 | 210 | 210 | 210 | 210 | 210 |
| | | | | C | 199 | 194 | 189 | 185 | 180 | 176 | 173 | 210 | 210 | 210 | 210 | 210 | 210 | 210 |
| | | | | D | 181 | 177 | 174 | 170 | 166 | 163 | 160 | 210 | 210 | 210 | 210 | 210 | 210 | 210 |
| FSH-4 | 5-6" | 2 nails | 243 | B | 210 | 210 | 210 | 210 | 210 | 210 | 210 | 210 | 210 | 210 | 210 | 210 | 210 | 210 |
| | | | | C | 210 | 210 | 210 | 210 | 210 | 210 | 210 | 210 | 210 | 210 | 210 | 210 | 210 | 210 |
| | | | | D | 210 | 210 | 210 | 210 | 210 | 210 | 210 | 210 | 210 | 210 | 210 | 210 | 210 | 210 |
| **GABLE ROOFS (SLOPE 6.2:12 – 12:12)** | | | | | | | | | | | | | | | | | | |
| FSH-3 | 6" | 2 nails | 140 | B | 210 | 210 | 210 | 210 | 210 | 210 | 210 | 210 | 210 | 210 | 210 | 210 | 210 | 210 |
| | | | | C | 210 | 210 | 206 | 202 | 196 | 192 | 188 | 210 | 210 | 210 | 210 | 210 | 210 | 210 |
| | | | | D | 197 | 192 | 189 | 186 | 181 | 177 | 175 | 210 | 210 | 210 | 210 | 210 | 207 | 203 |
| FSH-4 | 5-6" | 2 nails | 243 | B | 210 | 210 | 210 | 210 | 210 | 210 | 210 | 210 | 210 | 210 | 210 | 210 | 210 | 210 |
| | | | | C | 210 | 210 | 210 | 210 | 210 | 210 | 210 | 210 | 210 | 210 | 210 | 210 | 210 | 210 |
| | | | | D | 210 | 210 | 210 | 210 | 210 | 210 | 210 | 210 | 210 | 210 | 210 | 210 | 210 | 210 |
| ROOF OVERHANG REDUCTION FACTOR[11] | | | | | 0.85 | | | | | | | 0.79 | | | | | | |

**Table C5. 5: Fancy Shake Maximum Wind Speeds of Hip Roof Cladding – 2026 FBC (HVHZ & Non-HVHZ); 2025 CBC; 2024 & 2021 IBC |1/2" PLYWOOD|**

| System No.[1] | Max Shingle Exposure | Shingle Fastener[4] | Allowable Pressure (psf) (ASD)[5,6] | Exposure Category[7] | ZONE 2/3 (CORNER/EDGE)[8] Maximum Wind Speed $V_{ult}$ (mph)[9,10,11] Building Height (ft)[12,13] | | | | | | | ZONE 1 (FIELD)[8] Maximum Wind Speed $V_{ult}$ (mph)[9,10,11] Building Height (ft)[12,13] | | | | | | |
|---|---|---|---|---|---|---|---|---|---|---|---|---|---|---|---|---|---|---|
| | | | | | 15 | 20 | 25 | 30 | 40 | 50 | 60 | 15 | 20 | 25 | 30 | 40 | 50 | 60 |
| **HIP ROOFS (SLOPE 3:12 – 4.4:12)** | | | | | | | | | | | | | | | | | | |
| FSH-3 | 6" | 2 nails | 140 | B | 210 | 210 | 210 | 210 | 210 | 210 | 210 | 210 | 210 | 210 | 210 | 210 | 210 | 210 |
| | | | | C | 210 | 207 | 203 | 198 | 193 | 188 | 185 | 210 | 210 | 210 | 210 | 210 | 210 | 210 |
| | | | | D | 194 | 189 | 186 | 182 | 178 | 174 | 172 | 210 | 210 | 210 | 210 | 210 | 207 | 203 |
| FSH-4 | 5-6" | 2 nails | 243 | B | 210 | 210 | 210 | 210 | 210 | 210 | 210 | 210 | 210 | 210 | 210 | 210 | 210 | 210 |
| | | | | C | 210 | 210 | 210 | 210 | 210 | 210 | 210 | 210 | 210 | 210 | 210 | 210 | 210 | 210 |
| | | | | D | 210 | 210 | 210 | 210 | 210 | 210 | 210 | 210 | 210 | 210 | 210 | 210 | 210 | 210 |
| **HIP ROOFS (SLOPE 4.5:12 – 6.1:12)** | | | | | | | | | | | | | | | | | | |
| FSH-3 | 6" | 2 nails | 140 | B | 210 | 210 | 210 | 210 | 210 | 210 | 210 | 210 | 210 | 210 | 210 | 210 | 210 | 210 |
| | | | | C | 210 | 210 | 210 | 210 | 210 | 210 | 209 | 210 | 210 | 210 | 210 | 210 | 210 | 210 |
| | | | | D | 210 | 210 | 210 | 206 | 201 | 197 | 194 | 210 | 210 | 210 | 210 | 210 | 210 | 210 |
| FSH-4 | 5-6" | 2 nails | 243 | B | 210 | 210 | 210 | 210 | 210 | 210 | 210 | 210 | 210 | 210 | 210 | 210 | 210 | 210 |
| | | | | C | 210 | 210 | 210 | 210 | 210 | 210 | 210 | 210 | 210 | 210 | 210 | 210 | 210 | 210 |
| | | | | D | 210 | 210 | 210 | 210 | 210 | 210 | 210 | 210 | 210 | 210 | 210 | 210 | 210 | 210 |
| **HIP ROOFS (SLOPE 6.2:12 – 12:12)** | | | | | | | | | | | | | | | | | | |
| FSH-3 | 6" | 2 nails | 140 | B | 210 | 210 | 210 | 210 | 210 | 210 | 210 | 210 | 210 | 210 | 210 | 210 | 210 | 210 |
| | | | | C | 210 | 210 | 210 | 206 | 200 | 195 | 192 | 210 | 210 | 210 | 210 | 210 | 210 | 210 |
| | | | | D | 201 | 196 | 193 | 189 | 185 | 181 | 178 | 210 | 210 | 210 | 210 | 210 | 210 | 210 |
| FSH-4 | 5-6" | 2 nails | 243 | B | 210 | 210 | 210 | 210 | 210 | 210 | 210 | 210 | 210 | 210 | 210 | 210 | 210 | 210 |
| | | | | C | 210 | 210 | 210 | 210 | 210 | 210 | 210 | 210 | 210 | 210 | 210 | 210 | 210 | 210 |
| | | | | D | 210 | 210 | 210 | 210 | 210 | 210 | 210 | 210 | 210 | 210 | 210 | 210 | 210 | 210 |
| ROOF OVERHANG REDUCTION FACTOR[11] | | | | | 0.83 | | | | | | | N/A | | | | | | |

**See *Table C5. 1* on page *35* for assembly details, and *General Notes for APPENDIX C2* – APPENDIX C8 on page *13* for referenced superscript table notes.**


www.bocaengineering.com BOCA ENGINEERING CO. info@bocaengineering.com
Greater Victoria Area: (250) 477-7777 203-1001 Cloverdale Ave., Victoria BC V8X 4C9
Metro Vancouver: (604) 385-5210 1567 Brearley St., White Rock BC V4B 3M6

## APPENDIX C6: INSPIRE CLASSIC SLATE (ICSL) WIND PRESSURE & WIND SPEED TABLES

**Table C6. 1: Inspire Classic Slate Assembly Configurations**

| System No.[1] | Min Sheathing[2,3] | Max Shingle Exposure | Shingle Fasteners[4,14] | Allowable Pressure[5,6] (psf)(ASD) |
|---|---|---|---|---|
| **ICSL-1** | 7/16" OSB | 6" | 2 nails per shingle, 11ga 1.75-inch galvanized ring-shank roofing nails | 111 |
| **ICSL-2** | 7/16" OSB | 6" | 4 nails per shingle, 11ga 1.75-inch galvanized ring-shank roofing nails | 180 |
| **ICSL-3** | 7/16" OSB | 7.5" | 2 nails per shingle, 11ga 1.75-inch galvanized ring-shank roofing nails | 82 |
| **ICSL-4** | 7/16" OSB | 7.5" | 4 nails per shingle, 11ga 1.75-inch galvanized ring-shank roofing nails | 170 |
| **ICSL-5** | 7/16" OSB | 7.5" | 2 screws per shingle, #10 2-inch wafer head screws | 173 |
| | | | | |
| **ICSL-6** | 1/2" Plywood | 6" | 2 nails per shingle, 11ga 1.75-inch galvanized ring-shank roofing nails | 148 |
| **ICSL-7** | 1/2" Plywood | 6" | 4 nails per shingle, 11ga 1.75-inch galvanized ring-shank roofing nails | 240 |
| **ICSL-8** | 1/2" Plywood | 7.5" | 2 nails per shingle, 11ga 1.75-inch galvanized ring-shank roofing nails | 110 |
| **ICSL-9** | 1/2" Plywood | 7.5" | 4 nails per shingle, 11ga 1.75-inch galvanized ring-shank roofing nails | 227 |
| **ICSL-10** | 1/2" Plywood | 7.5" | 2 screws per shingle, #10 2-inch wafer head screws | 231 |
| | | | | |
| **ICSL-11** | 5/8" Plywood | 6" | 2 nails per shingle, 11ga 1.75-inch galvanized ring-shank roofing nails | 170 |
| **ICSL-12** | 5/8" Plywood | 6" | 4 nails per shingle, 11ga 1.75-inch galvanized ring-shank roofing nails | 243 |
| **ICSL-13** | 5/8" Plywood | 7.5" | 2 nails per shingle, 11ga 1.75-inch galvanized ring-shank roofing nails | 133 |
| **ICSL-14** | 5/8" Plywood | 7.5" | 4 nails per shingle, 11ga 1.75-inch galvanized ring-shank roofing nails | 227 |
| **ICSL-15** | 5/8" Plywood | 7.5" | 2 screws per shingle, #10 2-inch wafer head screws | 231 |

**See *General Notes for APPENDIX C2 – APPENDIX C8* on page *13* for referenced superscript table notes.**

Allowable Pressure (ASD) design values for max 7.5" exposure can be used for shingle exposures less than 7.5".

For 4 nails per shingle assemblies, install 2 nails per nail marking. Refer to installation instructions in Appendix E.

In accordance with the 2026 Florida Building Code (FBC), minimum 19/32-inch (5/8") plywood or wood planks must be installed for new roof deck construction in HVHZ regions.

Unless noted otherwise, the published allowable pressure (ASD) values apply to HVHZ and Non-HVHZ applications, and include a safety factor of 2.

**<WIND SPEED TABLES BEGIN NEXT PAGE>**

**Table C6. 2: Inspire Classic Slate Maximum Wind Speeds of Gable Roof Cladding-2026 FBC (Non-HVHZ); 2025 CBC; 2024 & 2021 IBC |7/16" OSB|**

| System No.[1] | Max Shingle Exposure | Shingle Fastener[4] | Allowable Pressure (psf) (ASD)[5,6] | Exposure Category[7] | ZONE 2/3 (CORNER/EDGE)[8] Maximum Wind Speed $V_{ult}$ (mph)[9,10,11] Building Height (ft)[12,13] | | | | | | | ZONE 1 (FIELD)[8] Maximum Wind Speed $V_{ult}$ (mph)[9,10,11] Building Height (ft)[12,13] | | | | | | |
|---|---|---|---|---|---|---|---|---|---|---|---|---|---|---|---|---|---|---|
| | | | | | 15 | 20 | 25 | 30 | 40 | 50 | 60 | 15 | 20 | 25 | 30 | 40 | 50 | 60 |
| **GABLE ROOFS (SLOPE 3:12 – 4.4:12)** | | | | | | | | | | | | | | | | | | |
| ICSL-1 | 6" | 2 nails | 111 | B | 199 | 190 | 185 | 179 | 174 | 169 | 165 | 210 | 210 | 210 | 210 | 210 | 210 | 210 |
| | | | | C | 163 | 158 | 155 | 151 | 147 | 144 | 141 | 210 | 208 | 204 | 199 | 194 | 189 | 186 |
| | | | | D | 148 | 144 | 142 | 139 | 136 | 133 | 131 | 195 | 190 | 187 | 183 | 179 | 175 | 173 |
| ICSL-2 | 6" | 4 nails | 180 | B | 210 | 210 | 210 | 210 | 210 | 210 | 210 | 210 | 210 | 210 | 210 | 210 | 210 | 210 |
| | | | | C | 207 | 201 | 197 | 193 | 187 | 183 | 180 | 210 | 210 | 210 | 210 | 210 | 210 | 210 |
| | | | | D | 188 | 184 | 180 | 177 | 173 | 169 | 167 | 210 | 210 | 210 | 210 | 210 | 210 | 210 |
| ICSL-3 | 7.5" | 2 nails | 83 | B | 171 | 164 | 159 | 154 | 150 | 145 | 141 | 210 | 210 | 209 | 203 | 197 | 191 | 186 |
| | | | | C | 140 | 136 | 133 | 130 | 126 | 123 | 121 | 184 | 179 | 175 | 171 | 166 | 163 | 160 |
| | | | | D | 127 | 124 | 122 | 120 | 117 | 114 | 113 | 167 | 163 | 160 | 158 | 154 | 151 | 148 |
| ICSL-4 | 7.5" | 4 nails | 170 | B | 210 | 210 | 210 | 210 | 210 | 209 | 204 | 210 | 210 | 210 | 210 | 210 | 210 | 210 |
| | | | | C | 201 | 196 | 191 | 187 | 182 | 178 | 175 | 210 | 210 | 210 | 210 | 210 | 210 | 210 |
| | | | | D | 183 | 179 | 175 | 172 | 168 | 165 | 162 | 210 | 210 | 210 | 210 | 210 | 210 | 210 |
| ICSL-5 | 7.5" | 2 screws | 173 | B | 210 | 210 | 210 | 210 | 210 | 210 | 206 | 210 | 210 | 210 | 210 | 210 | 210 | 210 |
| | | | | C | 203 | 197 | 193 | 189 | 184 | 179 | 176 | 210 | 210 | 210 | 210 | 210 | 210 | 210 |
| | | | | D | 184 | 180 | 177 | 174 | 170 | 166 | 164 | 210 | 210 | 210 | 210 | 210 | 210 | 210 |
| **GABLE ROOFS (SLOPE 4.5:12 – 6.1:12)** | | | | | | | | | | | | | | | | | | |
| ICSL-1 | 6" | 2 nails | 111 | B | 210 | 208 | 201 | 195 | 190 | 184 | 179 | 210 | 210 | 210 | 210 | 210 | 210 | 210 |
| | | | | C | 177 | 172 | 169 | 165 | 160 | 157 | 154 | 210 | 210 | 210 | 210 | 210 | 210 | 210 |
| | | | | D | 161 | 157 | 155 | 152 | 148 | 145 | 143 | 210 | 210 | 210 | 209 | 204 | 200 | 197 |
| ICSL-2 | 6" | 4 nails | 180 | B | 210 | 210 | 210 | 210 | 210 | 210 | 210 | 210 | 210 | 210 | 210 | 210 | 210 | 210 |
| | | | | C | 210 | 210 | 210 | 210 | 204 | 199 | 196 | 210 | 210 | 210 | 210 | 210 | 210 | 210 |
| | | | | D | 205 | 200 | 197 | 193 | 189 | 185 | 182 | 210 | 210 | 210 | 210 | 210 | 210 | 210 |
| ICSL-3 | 7.5" | 2 nails | 83 | B | 186 | 178 | 173 | 168 | 163 | 158 | 154 | 210 | 210 | 210 | 210 | 210 | 210 | 210 |
| | | | | C | 152 | 148 | 145 | 142 | 138 | 135 | 132 | 210 | 204 | 199 | 195 | 190 | 185 | 182 |
| | | | | D | 138 | 135 | 133 | 130 | 127 | 125 | 123 | 191 | 186 | 183 | 180 | 175 | 172 | 169 |
| ICSL-4 | 7.5" | 4 nails | 170 | B | 210 | 210 | 210 | 210 | 210 | 210 | 210 | 210 | 210 | 210 | 210 | 210 | 210 | 210 |
| | | | | C | 210 | 210 | 209 | 204 | 198 | 194 | 190 | 210 | 210 | 210 | 210 | 210 | 210 | 210 |
| | | | | D | 199 | 195 | 191 | 188 | 183 | 180 | 177 | 210 | 210 | 210 | 210 | 210 | 210 | 210 |
| ICSL-5 | 7.5" | 2 screws | 173 | B | 210 | 210 | 210 | 210 | 210 | 210 | 210 | 210 | 210 | 210 | 210 | 210 | 210 | 210 |
| | | | | C | 210 | 210 | 210 | 206 | 200 | 196 | 192 | 210 | 210 | 210 | 210 | 210 | 210 | 210 |
| | | | | D | 201 | 196 | 193 | 190 | 185 | 181 | 178 | 210 | 210 | 210 | 210 | 210 | 210 | 210 |
| **GABLE ROOFS (SLOPE 6.2:12 – 12:12)** | | | | | | | | | | | | | | | | | | |
| ICSL-1 | 6" | 2 nails | 111 | B | 210 | 210 | 210 | 210 | 207 | 200 | 196 | 210 | 210 | 210 | 210 | 210 | 210 | 210 |
| | | | | C | 193 | 188 | 184 | 180 | 175 | 171 | 168 | 210 | 210 | 210 | 209 | 203 | 198 | 195 |
| | | | | D | 175 | 171 | 168 | 165 | 161 | 158 | 156 | 204 | 199 | 196 | 192 | 188 | 184 | 181 |
| ICSL-2 | 6" | 4 nails | 180 | B | 210 | 210 | 210 | 210 | 210 | 210 | 210 | 210 | 210 | 210 | 210 | 210 | 210 | 210 |
| | | | | C | 210 | 210 | 210 | 210 | 210 | 210 | 210 | 210 | 210 | 210 | 210 | 210 | 210 | 210 |
| | | | | D | 210 | 210 | 210 | 210 | 205 | 201 | 198 | 210 | 210 | 210 | 210 | 210 | 210 | 210 |
| ICSL-3 | 7.5" | 2 nails | 83 | B | 203 | 194 | 188 | 183 | 178 | 172 | 168 | 210 | 210 | 210 | 210 | 207 | 200 | 195 |
| | | | | C | 166 | 161 | 158 | 155 | 150 | 147 | 144 | 193 | 188 | 184 | 180 | 175 | 171 | 168 |
| | | | | D | 151 | 147 | 145 | 142 | 139 | 136 | 134 | 175 | 171 | 168 | 165 | 161 | 158 | 156 |
| ICSL-4 | 7.5" | 4 nails | 170 | B | 210 | 210 | 210 | 210 | 210 | 210 | 210 | 210 | 210 | 210 | 210 | 210 | 210 | 210 |
| | | | | C | 210 | 210 | 210 | 210 | 210 | 210 | 207 | 210 | 210 | 210 | 210 | 210 | 210 | 210 |
| | | | | D | 210 | 210 | 208 | 205 | 200 | 196 | 193 | 210 | 210 | 210 | 210 | 210 | 210 | 210 |
| ICSL-5 | 7.5" | 2 screws | 173 | B | 210 | 210 | 210 | 210 | 210 | 210 | 210 | 210 | 210 | 210 | 210 | 210 | 210 | 210 |
| | | | | C | 210 | 210 | 210 | 210 | 210 | 210 | 209 | 210 | 210 | 210 | 210 | 210 | 210 | 210 |
| | | | | D | 210 | 210 | 210 | 206 | 201 | 197 | 194 | 210 | 210 | 210 | 210 | 210 | 210 | 210 |
| ROOF OVERHANG REDUCTION FACTOR[11] | | | | | 0.85 | | | | | | | 0.79 | | | | | | |

***See Table C6. 1 on page* 38 for assembly details, and *General Notes for APPENDIX C2* – APPENDIX C8 on page *13* for referenced superscript table notes.**


www.bocaengineering.com BOCA ENGINEERING CO. info@bocaengineering.com
Greater Victoria Area: (250) 477-7777 203-1001 Cloverdale Ave., Victoria BC V8X 4C9
Metro Vancouver: (604) 385-5210 1567 Brearley St., White Rock BC V4B 3M6

**Table C6. 3: Inspire Classic Slate Maximum Wind Speeds of Hip Roof Cladding - 2026 FBC (Non-HVHZ); 2025 CBC; 2024 & 2021 IBC |7/16" OSB|**

| System No.[1] | Max Shingle Exposure | Shingle Fastener[4] | Allowable Pressure (psf) (ASD)[5,6] | Exposure Category[7] | ZONE 2/3 (CORNER/EDGE)[8] Maximum Wind Speed $V_{ult}$ (mph)[9,10,11] Building Height (ft)[12,13] | | | | | | | ZONE 1 (FIELD)[8] Maximum Wind Speed $V_{ult}$ (mph)[9,10,11] Building Height (ft)[12,13] | | | | | | |
|---|---|---|---|---|---|---|---|---|---|---|---|---|---|---|---|---|---|---|
| | | | | | 15 | 20 | 25 | 30 | 40 | 50 | 60 | 15 | 20 | 25 | 30 | 40 | 50 | 60 |
| **HIP ROOFS (SLOPE 3:12 – 4.4:12)** | | | | | | | | | | | | | | | | | | |
| ICSL-1 | 6" | 2 nails | 111 | B | 210 | 210 | 210 | 209 | 203 | 197 | 192 | 210 | 210 | 210 | 210 | 210 | 210 | 210 |
| | | | | C | 190 | 184 | 180 | 177 | 171 | 168 | 165 | 210 | 210 | 210 | 209 | 203 | 198 | 195 |
| | | | | D | 172 | 168 | 165 | 162 | 158 | 155 | 153 | 204 | 199 | 196 | 192 | 188 | 184 | 181 |
| ICSL-2 | 6" | 4 nails | 180 | B | 210 | 210 | 210 | 210 | 210 | 210 | 210 | 210 | 210 | 210 | 210 | 210 | 210 | 210 |
| | | | | C | 210 | 210 | 210 | 210 | 210 | 210 | 209 | 210 | 210 | 210 | 210 | 210 | 210 | 210 |
| | | | | D | 210 | 210 | 210 | 207 | 202 | 198 | 195 | 210 | 210 | 210 | 210 | 210 | 210 | 210 |
| ICSL-3 | 7.5" | 2 nails | 83 | B | 199 | 191 | 185 | 180 | 175 | 169 | 165 | 210 | 210 | 210 | 210 | 207 | 200 | 195 |
| | | | | C | 163 | 158 | 155 | 152 | 147 | 144 | 141 | 193 | 188 | 184 | 180 | 175 | 171 | 168 |
| | | | | D | 148 | 145 | 142 | 140 | 136 | 133 | 131 | 175 | 171 | 168 | 165 | 161 | 158 | 156 |
| ICSL-4 | 7.5" | 4 nails | 170 | B | 210 | 210 | 210 | 210 | 210 | 210 | 210 | 210 | 210 | 210 | 210 | 210 | 210 | 210 |
| | | | | C | 210 | 210 | 210 | 210 | 210 | 207 | 204 | 210 | 210 | 210 | 210 | 210 | 210 | 210 |
| | | | | D | 210 | 208 | 204 | 201 | 196 | 192 | 189 | 210 | 210 | 210 | 210 | 210 | 210 | 210 |
| ICSL-5 | 7.5" | 2 screws | 173 | B | 210 | 210 | 210 | 210 | 210 | 210 | 210 | 210 | 210 | 210 | 210 | 210 | 210 | 210 |
| | | | | C | 210 | 210 | 210 | 210 | 210 | 209 | 205 | 210 | 210 | 210 | 210 | 210 | 210 | 210 |
| | | | | D | 210 | 210 | 206 | 203 | 198 | 194 | 191 | 210 | 210 | 210 | 210 | 210 | 210 | 210 |
| **HIP ROOFS (SLOPE 4.5:12 – 6.1:12)** | | | | | | | | | | | | | | | | | | |
| ICSL-1 | 6" | 2 nails | 111 | B | 210 | 210 | 210 | 210 | 210 | 210 | 210 | 210 | 210 | 210 | 210 | 210 | 210 | 210 |
| | | | | C | 210 | 208 | 204 | 199 | 194 | 189 | 186 | 210 | 210 | 210 | 210 | 210 | 210 | 210 |
| | | | | D | 195 | 190 | 187 | 183 | 179 | 175 | 173 | 210 | 210 | 210 | 210 | 210 | 206 | 203 |
| ICSL-2 | 6" | 4 nails | 180 | B | 210 | 210 | 210 | 210 | 210 | 210 | 210 | 210 | 210 | 210 | 210 | 210 | 210 | 210 |
| | | | | C | 210 | 210 | 210 | 210 | 210 | 210 | 210 | 210 | 210 | 210 | 210 | 210 | 210 | 210 |
| | | | | D | 210 | 210 | 210 | 210 | 210 | 210 | 210 | 210 | 210 | 210 | 210 | 210 | 210 | 210 |
| ICSL-3 | 7.5" | 2 nails | 83 | B | 210 | 210 | 209 | 203 | 197 | 191 | 186 | 210 | 210 | 210 | 210 | 210 | 210 | 210 |
| | | | | C | 184 | 179 | 175 | 171 | 166 | 163 | 160 | 210 | 210 | 206 | 201 | 196 | 191 | 188 |
| | | | | D | 167 | 163 | 160 | 158 | 154 | 151 | 148 | 196 | 192 | 188 | 185 | 181 | 177 | 174 |
| ICSL-4 | 7.5" | 4 nails | 170 | B | 210 | 210 | 210 | 210 | 210 | 210 | 210 | 210 | 210 | 210 | 210 | 210 | 210 | 210 |
| | | | | C | 210 | 210 | 210 | 210 | 210 | 210 | 210 | 210 | 210 | 210 | 210 | 210 | 210 | 210 |
| | | | | D | 210 | 210 | 210 | 210 | 210 | 210 | 210 | 210 | 210 | 210 | 210 | 210 | 210 | 210 |
| ICSL-5 | 7.5" | 2 screws | 173 | B | 210 | 210 | 210 | 210 | 210 | 210 | 210 | 210 | 210 | 210 | 210 | 210 | 210 | 210 |
| | | | | C | 210 | 210 | 210 | 210 | 210 | 210 | 210 | 210 | 210 | 210 | 210 | 210 | 210 | 210 |
| | | | | D | 210 | 210 | 210 | 210 | 210 | 210 | 210 | 210 | 210 | 210 | 210 | 210 | 210 | 210 |
| **HIP ROOFS (SLOPE 6.2:12 – 12:12)** | | | | | | | | | | | | | | | | | | |
| ICSL-1 | 6" | 2 nails | 111 | B | 210 | 210 | 210 | 210 | 210 | 204 | 199 | 210 | 210 | 210 | 210 | 210 | 210 | 210 |
| | | | | C | 197 | 191 | 187 | 183 | 178 | 174 | 171 | 210 | 210 | 210 | 210 | 210 | 210 | 210 |
| | | | | D | 179 | 175 | 172 | 169 | 164 | 161 | 159 | 210 | 210 | 210 | 209 | 204 | 200 | 197 |
| ICSL-2 | 6" | 4 nails | 180 | B | 210 | 210 | 210 | 210 | 210 | 210 | 210 | 210 | 210 | 210 | 210 | 210 | 210 | 210 |
| | | | | C | 210 | 210 | 210 | 210 | 210 | 210 | 210 | 210 | 210 | 210 | 210 | 210 | 210 | 210 |
| | | | | D | 210 | 210 | 210 | 210 | 209 | 205 | 202 | 210 | 210 | 210 | 210 | 210 | 210 | 210 |
| ICSL-3 | 7.5" | 2 nails | 83 | B | 207 | 198 | 192 | 186 | 181 | 176 | 171 | 210 | 210 | 210 | 210 | 210 | 210 | 210 |
| | | | | C | 169 | 164 | 161 | 158 | 153 | 149 | 147 | 210 | 204 | 199 | 195 | 190 | 185 | 182 |
| | | | | D | 154 | 150 | 147 | 145 | 141 | 138 | 136 | 191 | 186 | 183 | 180 | 175 | 172 | 169 |
| ICSL-4 | 7.5" | 4 nails | 170 | B | 210 | 210 | 210 | 210 | 210 | 210 | 210 | 210 | 210 | 210 | 210 | 210 | 210 | 210 |
| | | | | C | 210 | 210 | 210 | 210 | 210 | 210 | 210 | 210 | 210 | 210 | 210 | 210 | 210 | 210 |
| | | | | D | 210 | 210 | 210 | 209 | 203 | 199 | 196 | 210 | 210 | 210 | 210 | 210 | 210 | 210 |
| ICSL-5 | 7.5" | 2 screws | 173 | B | 210 | 210 | 210 | 210 | 210 | 210 | 210 | 210 | 210 | 210 | 210 | 210 | 210 | 210 |
| | | | | C | 210 | 210 | 210 | 210 | 210 | 210 | 210 | 210 | 210 | 210 | 210 | 210 | 210 | 210 |
| | | | | D | 210 | 210 | 210 | 210 | 205 | 201 | 198 | 210 | 210 | 210 | 210 | 210 | 210 | 210 |
| ROOF OVERHANG REDUCTION FACTOR[11] | | | | | 0.83 | | | | | | | N/A | | | | | | |

**See *Table C6. 1* on page 38 for assembly details, and *General Notes for APPENDIX C2* – APPENDIX C8 on page *13* for referenced superscript table notes.**


www.bocaengineering.com BOCA ENGINEERING CO. info@bocaengineering.com
Greater Victoria Area: (250) 477-7777 203-1001 Cloverdale Ave., Victoria BC V8X 4C9
Metro Vancouver: (604) 385-5210 1567 Brearley St., White Rock BC V4B 3M6

**Table C6. 4: Inspire Classic Slate Maximum Wind Speeds of Gable Roof Cladding-2026 FBC (HVHZ & Non-HVHZ); 2025 CBC; 2024 & 2021 IBC |1/2" PLYWOOD|**

| System No.[1] | Max Shingle Exposure | Shingle Fastener[4] | Allowable Pressure (psf) (ASD)[5,6] | Exposure Category[7] | ZONE 2/3 (CORNER/EDGE)[8] Maximum Wind Speed $V_{ult}$ (mph)[9,10,11] Building Height (ft)[12,13] | | | | | | | ZONE 1 (FIELD)[8] Maximum Wind Speed $V_{ult}$ (mph)[9,10,11] Building Height (ft)[12,13] | | | | | | |
|---|---|---|---|---|---|---|---|---|---|---|---|---|---|---|---|---|---|---|
| | | | | | 15 | 20 | 25 | 30 | 40 | 50 | 60 | 15 | 20 | 25 | 30 | 40 | 50 | 60 |
| **GABLE ROOFS (SLOPE 3:12 – 4.4:12)** | | | | | | | | | | | | | | | | | | |
| ICSL-6 | 6" | 2 nails | 148 | B | 210 | 210 | 210 | 207 | 201 | 195 | 190 | 210 | 210 | 210 | 210 | 210 | 210 | 210 |
| | | | | C | 188 | 183 | 179 | 175 | 170 | 166 | 163 | 210 | 210 | 210 | 210 | 210 | 210 | 210 |
| | | | | D | 171 | 167 | 164 | 161 | 157 | 154 | 151 | 210 | 210 | 210 | 210 | 206 | 202 | 199 |
| ICSL-7 | 6" | 4 nails | 240 | B | 210 | 210 | 210 | 210 | 210 | 210 | 210 | 210 | 210 | 210 | 210 | 210 | 210 | 210 |
| | | | | C | 210 | 210 | 210 | 210 | 210 | 210 | 207 | 210 | 210 | 210 | 210 | 210 | 210 | 210 |
| | | | | D | 210 | 210 | 208 | 205 | 200 | 196 | 193 | 210 | 210 | 210 | 210 | 210 | 210 | 210 |
| ICSL-8 | 7.5" | 2 nails | 110 | B | 198 | 190 | 184 | 178 | 174 | 168 | 164 | 210 | 210 | 210 | 210 | 210 | 210 | 210 |
| | | | | C | 162 | 157 | 154 | 151 | 146 | 143 | 140 | 210 | 207 | 203 | 199 | 193 | 188 | 185 |
| | | | | D | 147 | 144 | 141 | 139 | 135 | 132 | 130 | 194 | 189 | 186 | 183 | 178 | 174 | 172 |
| ICSL-9 | 7.5" | 4 nails | 227 | B | 210 | 210 | 210 | 210 | 210 | 210 | 210 | 210 | 210 | 210 | 210 | 210 | 210 | 210 |
| | | | | C | 210 | 210 | 210 | 210 | 210 | 205 | 202 | 210 | 210 | 210 | 210 | 210 | 210 | 210 |
| | | | | D | 210 | 206 | 203 | 199 | 194 | 190 | 187 | 210 | 210 | 210 | 210 | 210 | 210 | 210 |
| ICSL-10 | 7.5" | 2 screws | 231 | B | 210 | 210 | 210 | 210 | 210 | 210 | 210 | 210 | 210 | 210 | 210 | 210 | 210 | 210 |
| | | | | C | 210 | 210 | 210 | 210 | 210 | 207 | 204 | 210 | 210 | 210 | 210 | 210 | 210 | 210 |
| | | | | D | 210 | 208 | 204 | 201 | 196 | 192 | 189 | 210 | 210 | 210 | 210 | 210 | 210 | 210 |
| **GABLE ROOFS (SLOPE 4.5:12 – 6.1:12)** | | | | | | | | | | | | | | | | | | |
| ICSL-6 | 6" | 2 nails | 148 | B | 210 | 210 | 210 | 210 | 210 | 210 | 207 | 210 | 210 | 210 | 210 | 210 | 210 | 210 |
| | | | | C | 205 | 199 | 195 | 191 | 185 | 181 | 178 | 210 | 210 | 210 | 210 | 210 | 210 | 210 |
| | | | | D | 186 | 182 | 178 | 175 | 171 | 168 | 165 | 210 | 210 | 210 | 210 | 210 | 210 | 210 |
| ICSL-7 | 6" | 4 nails | 240 | B | 210 | 210 | 210 | 210 | 210 | 210 | 210 | 210 | 210 | 210 | 210 | 210 | 210 | 210 |
| | | | | C | 210 | 210 | 210 | 210 | 210 | 210 | 210 | 210 | 210 | 210 | 210 | 210 | 210 | 210 |
| | | | | D | 210 | 210 | 210 | 210 | 210 | 210 | 210 | 210 | 210 | 210 | 210 | 210 | 210 | 210 |
| ICSL-8 | 7.5" | 2 nails | 110 | B | 210 | 207 | 200 | 195 | 189 | 183 | 179 | 210 | 210 | 210 | 210 | 210 | 210 | 210 |
| | | | | C | 177 | 172 | 168 | 164 | 160 | 156 | 153 | 210 | 210 | 210 | 210 | 210 | 210 | 210 |
| | | | | D | 160 | 157 | 154 | 151 | 147 | 144 | 142 | 210 | 210 | 210 | 208 | 203 | 199 | 196 |
| ICSL-9 | 7.5" | 4 nails | 227 | B | 210 | 210 | 210 | 210 | 210 | 210 | 210 | 210 | 210 | 210 | 210 | 210 | 210 | 210 |
| | | | | C | 210 | 210 | 210 | 210 | 210 | 210 | 210 | 210 | 210 | 210 | 210 | 210 | 210 | 210 |
| | | | | D | 210 | 210 | 210 | 210 | 210 | 207 | 204 | 210 | 210 | 210 | 210 | 210 | 210 | 210 |
| ICSL-10 | 7.5" | 2 screws | 231 | B | 210 | 210 | 210 | 210 | 210 | 210 | 210 | 210 | 210 | 210 | 210 | 210 | 210 | 210 |
| | | | | C | 210 | 210 | 210 | 210 | 210 | 210 | 210 | 210 | 210 | 210 | 210 | 210 | 210 | 210 |
| | | | | D | 210 | 210 | 210 | 210 | 210 | 209 | 206 | 210 | 210 | 210 | 210 | 210 | 210 | 210 |
| **GABLE ROOFS (SLOPE 6.2:12 – 12:12)** | | | | | | | | | | | | | | | | | | |
| ICSL-6 | 6" | 2 nails | 148 | B | 210 | 210 | 210 | 210 | 210 | 210 | 210 | 210 | 210 | 210 | 210 | 210 | 210 | 210 |
| | | | | C | 210 | 210 | 210 | 208 | 202 | 197 | 193 | 210 | 210 | 210 | 210 | 210 | 210 | 210 |
| | | | | D | 203 | 198 | 194 | 191 | 186 | 182 | 180 | 210 | 210 | 210 | 210 | 210 | 210 | 209 |
| ICSL-7 | 6" | 4 nails | 240 | B | 210 | 210 | 210 | 210 | 210 | 210 | 210 | 210 | 210 | 210 | 210 | 210 | 210 | 210 |
| | | | | C | 210 | 210 | 210 | 210 | 210 | 210 | 210 | 210 | 210 | 210 | 210 | 210 | 210 | 210 |
| | | | | D | 210 | 210 | 210 | 210 | 210 | 210 | 210 | 210 | 210 | 210 | 210 | 210 | 210 | 210 |
| ICSL-8 | 7.5" | 2 nails | 110 | B | 210 | 210 | 210 | 210 | 206 | 199 | 195 | 210 | 210 | 210 | 210 | 210 | 210 | 210 |
| | | | | C | 192 | 187 | 183 | 179 | 174 | 170 | 167 | 210 | 210 | 210 | 208 | 202 | 198 | 194 |
| | | | | D | 175 | 171 | 168 | 165 | 161 | 157 | 155 | 203 | 198 | 195 | 192 | 187 | 183 | 180 |
| ICSL-9 | 7.5" | 4 nails | 227 | B | 210 | 210 | 210 | 210 | 210 | 210 | 210 | 210 | 210 | 210 | 210 | 210 | 210 | 210 |
| | | | | C | 210 | 210 | 210 | 210 | 210 | 210 | 210 | 210 | 210 | 210 | 210 | 210 | 210 | 210 |
| | | | | D | 210 | 210 | 210 | 210 | 210 | 210 | 210 | 210 | 210 | 210 | 210 | 210 | 210 | 210 |
| ICSL-10 | 7.5" | 2 screws | 231 | B | 210 | 210 | 210 | 210 | 210 | 210 | 210 | 210 | 210 | 210 | 210 | 210 | 210 | 210 |
| | | | | C | 210 | 210 | 210 | 210 | 210 | 210 | 210 | 210 | 210 | 210 | 210 | 210 | 210 | 210 |
| | | | | D | 210 | 210 | 210 | 210 | 210 | 210 | 210 | 210 | 210 | 210 | 210 | 210 | 210 | 210 |
| ROOF OVERHANG REDUCTION FACTOR[11] | | | | | 0.85 | | | | | | | 0.79 | | | | | | |

**See *Table C6. 1* on page 38 for assembly details, and *General Notes for APPENDIX C2* – APPENDIX C8 on page *13* for referenced superscript table notes.**

**Table C6. 5: Inspire Classic Slate Maximum Wind Speeds of Hip Roof Cladding – 2026 FBC (HVHZ & Non-HVHZ); 2025 CBC; 2024 & 2021 IBC |1/2" PLYWOOD|**

| System No.[1] | Max Shingle Exposure | Shingle Fastener[4] | Allowable Pressure (psf) (ASD)[5,6] | Exposure Category[7] | ZONE 2/3 (CORNER/EDGE)[8] Maximum Wind Speed $V_{ult}$ (mph)[9,10,11] Building Height (ft)[12,13] | | | | | | | ZONE 1 (FIELD)[8] Maximum Wind Speed $V_{ult}$ (mph)[9,10,11] Building Height (ft)[12,13] | | | | | | |
|---|---|---|---|---|---|---|---|---|---|---|---|---|---|---|---|---|---|---|
| | | | | | 15 | 20 | 25 | 30 | 40 | 50 | 60 | 15 | 20 | 25 | 30 | 40 | 50 | 60 |
| **HIP ROOFS (SLOPE 3:12 – 4.4:12)** | | | | | | | | | | | | | | | | | | |
| ICSL-6 | 6" | 2 nails | 148 | B | 210 | 210 | 210 | 210 | 210 | 210 | 210 | 210 | 210 | 210 | 210 | 210 | 210 | 210 |
| | | | | C | 210 | 210 | 208 | 204 | 198 | 193 | 190 | 210 | 210 | 210 | 210 | 210 | 210 | 210 |
| | | | | D | 199 | 194 | 191 | 187 | 183 | 179 | 176 | 210 | 210 | 210 | 210 | 210 | 210 | 209 |
| ICSL-7 | 6" | 4 nails | 240 | B | 210 | 210 | 210 | 210 | 210 | 210 | 210 | 210 | 210 | 210 | 210 | 210 | 210 | 210 |
| | | | | C | 210 | 210 | 210 | 210 | 210 | 210 | 210 | 210 | 210 | 210 | 210 | 210 | 210 | 210 |
| | | | | D | 210 | 210 | 210 | 210 | 210 | 210 | 210 | 210 | 210 | 210 | 210 | 210 | 210 | 210 |
| ICSL-8 | 7.5" | 2 nails | 110 | B | 210 | 210 | 210 | 208 | 202 | 196 | 191 | 210 | 210 | 210 | 210 | 210 | 210 | 210 |
| | | | | C | 189 | 184 | 180 | 176 | 171 | 167 | 164 | 210 | 210 | 210 | 208 | 202 | 198 | 194 |
| | | | | D | 172 | 168 | 164 | 162 | 158 | 154 | 152 | 203 | 198 | 195 | 192 | 187 | 183 | 180 |
| ICSL-9 | 7.5" | 4 nails | 227 | B | 210 | 210 | 210 | 210 | 210 | 210 | 210 | 210 | 210 | 210 | 210 | 210 | 210 | 210 |
| | | | | C | 210 | 210 | 210 | 210 | 210 | 210 | 210 | 210 | 210 | 210 | 210 | 210 | 210 | 210 |
| | | | | D | 210 | 210 | 210 | 210 | 210 | 210 | 210 | 210 | 210 | 210 | 210 | 210 | 210 | 210 |
| ICSL-10 | 7.5" | 2 screws | 231 | B | 210 | 210 | 210 | 210 | 210 | 210 | 210 | 210 | 210 | 210 | 210 | 210 | 210 | 210 |
| | | | | C | 210 | 210 | 210 | 210 | 210 | 210 | 210 | 210 | 210 | 210 | 210 | 210 | 210 | 210 |
| | | | | D | 210 | 210 | 210 | 210 | 210 | 210 | 210 | 210 | 210 | 210 | 210 | 210 | 210 | 210 |
| **HIP ROOFS (SLOPE 4.5:12 – 6.1:12)** | | | | | | | | | | | | | | | | | | |
| ICSL-6 | 6" | 2 nails | 148 | B | 210 | 210 | 210 | 210 | 210 | 210 | 210 | 210 | 210 | 210 | 210 | 210 | 210 | 210 |
| | | | | C | 210 | 210 | 210 | 210 | 210 | 210 | 210 | 210 | 210 | 210 | 210 | 210 | 210 | 210 |
| | | | | D | 210 | 210 | 210 | 210 | 206 | 202 | 199 | 210 | 210 | 210 | 210 | 210 | 210 | 210 |
| ICSL-7 | 6" | 4 nails | 240 | B | 210 | 210 | 210 | 210 | 210 | 210 | 210 | 210 | 210 | 210 | 210 | 210 | 210 | 210 |
| | | | | C | 210 | 210 | 210 | 210 | 210 | 210 | 210 | 210 | 210 | 210 | 210 | 210 | 210 | 210 |
| | | | | D | 210 | 210 | 210 | 210 | 210 | 210 | 210 | 210 | 210 | 210 | 210 | 210 | 210 | 210 |
| ICSL-8 | 7.5" | 2 nails | 110 | B | 210 | 210 | 210 | 210 | 210 | 210 | 210 | 210 | 210 | 210 | 210 | 210 | 210 | 210 |
| | | | | C | 210 | 207 | 203 | 199 | 193 | 188 | 185 | 210 | 210 | 210 | 210 | 210 | 210 | 210 |
| | | | | D | 194 | 189 | 186 | 183 | 178 | 174 | 172 | 210 | 210 | 210 | 210 | 209 | 205 | 202 |
| ICSL-9 | 7.5" | 4 nails | 227 | B | 210 | 210 | 210 | 210 | 210 | 210 | 210 | 210 | 210 | 210 | 210 | 210 | 210 | 210 |
| | | | | C | 210 | 210 | 210 | 210 | 210 | 210 | 210 | 210 | 210 | 210 | 210 | 210 | 210 | 210 |
| | | | | D | 210 | 210 | 210 | 210 | 210 | 210 | 210 | 210 | 210 | 210 | 210 | 210 | 210 | 210 |
| ICSL-10 | 7.5" | 2 screws | 231 | B | 210 | 210 | 210 | 210 | 210 | 210 | 210 | 210 | 210 | 210 | 210 | 210 | 210 | 210 |
| | | | | C | 210 | 210 | 210 | 210 | 210 | 210 | 210 | 210 | 210 | 210 | 210 | 210 | 210 | 210 |
| | | | | D | 210 | 210 | 210 | 210 | 210 | 210 | 210 | 210 | 210 | 210 | 210 | 210 | 210 | 210 |
| **HIP ROOFS (SLOPE 6.2:12 – 12:12)** | | | | | | | | | | | | | | | | | | |
| ICSL-6 | 6" | 2 nails | 148 | B | 210 | 210 | 210 | 210 | 210 | 210 | 210 | 210 | 210 | 210 | 210 | 210 | 210 | 210 |
| | | | | C | 210 | 210 | 210 | 210 | 206 | 201 | 197 | 210 | 210 | 210 | 210 | 210 | 210 | 210 |
| | | | | D | 207 | 202 | 198 | 195 | 190 | 186 | 183 | 210 | 210 | 210 | 210 | 210 | 210 | 210 |
| ICSL-7 | 6" | 4 nails | 240 | B | 210 | 210 | 210 | 210 | 210 | 210 | 210 | 210 | 210 | 210 | 210 | 210 | 210 | 210 |
| | | | | C | 210 | 210 | 210 | 210 | 210 | 210 | 210 | 210 | 210 | 210 | 210 | 210 | 210 | 210 |
| | | | | D | 210 | 210 | 210 | 210 | 210 | 210 | 210 | 210 | 210 | 210 | 210 | 210 | 210 | 210 |
| ICSL-8 | 7.5" | 2 nails | 110 | B | 210 | 210 | 210 | 210 | 210 | 203 | 198 | 210 | 210 | 210 | 210 | 210 | 210 | 210 |
| | | | | C | 196 | 190 | 186 | 183 | 177 | 173 | 170 | 210 | 210 | 210 | 210 | 210 | 210 | 210 |
| | | | | D | 178 | 174 | 171 | 168 | 164 | 160 | 158 | 210 | 210 | 210 | 208 | 203 | 199 | 196 |
| ICSL-9 | 7.5" | 4 nails | 227 | B | 210 | 210 | 210 | 210 | 210 | 210 | 210 | 210 | 210 | 210 | 210 | 210 | 210 | 210 |
| | | | | C | 210 | 210 | 210 | 210 | 210 | 210 | 210 | 210 | 210 | 210 | 210 | 210 | 210 | 210 |
| | | | | D | 210 | 210 | 210 | 210 | 210 | 210 | 210 | 210 | 210 | 210 | 210 | 210 | 210 | 210 |
| ICSL-10 | 7.5" | 2 screws | 231 | B | 210 | 210 | 210 | 210 | 210 | 210 | 210 | 210 | 210 | 210 | 210 | 210 | 210 | 210 |
| | | | | C | 210 | 210 | 210 | 210 | 210 | 210 | 210 | 210 | 210 | 210 | 210 | 210 | 210 | 210 |
| | | | | D | 210 | 210 | 210 | 210 | 210 | 210 | 210 | 210 | 210 | 210 | 210 | 210 | 210 | 210 |
| ROOF OVERHANG REDUCTION FACTOR[11] | | | | | 0.83 | | | | | | | N/A | | | | | | |

**See *Table C6. 1* on page 38 for assembly details, and *General Notes for APPENDIX C2* – APPENDIX C8 on page *13* for referenced superscript table notes.**


www.bocaengineering.com BOCA ENGINEERING CO. info@bocaengineering.com
Greater Victoria Area: (250) 477-7777 203-1001 Cloverdale Ave., Victoria BC V8X 4C9
Metro Vancouver: (604) 385-5210 1567 Brearley St., White Rock BC V4B 3M6

**Table C6. 6: Inspire Classic Slate Maximum Wind Speeds of Gable Roof Cladding-2026 FBC (HVHZ & Non-HVHZ); 2025 CBC; 2024 & 2021 IBC |5/8" PLYWOOD|**

| System No.[1] | Max Shingle Exposure | Shingle Fastener[4] | Allowable Pressure (psf) (ASD)[5,6] | Exposure Category[7] | ZONE 2/3 (CORNER/EDGE)[8] Maximum Wind Speed $V_{ult}$ (mph)[9,10,11] Building Height (ft)[12,13] | | | | | | | ZONE 1 (FIELD)[8] Maximum Wind Speed $V_{ult}$ (mph)[9,10,11] Building Height (ft)[12,13] | | | | | | |
|---|---|---|---|---|---|---|---|---|---|---|---|---|---|---|---|---|---|---|
| | | | | | 15 | 20 | 25 | 30 | 40 | 50 | 60 | 15 | 20 | 25 | 30 | 40 | 50 | 60 |
| **GABLE ROOFS (SLOPE 3:12 – 4.4:12)** | | | | | | | | | | | | | | | | | | |
| ICSL-11 | 6" | 2 nails | 170 | B | 210 | 210 | 210 | 210 | 210 | 209 | 204 | 210 | 210 | 210 | 210 | 210 | 210 | 210 |
| | | | | C | 201 | 196 | 191 | 187 | 182 | 178 | 175 | 210 | 210 | 210 | 210 | 210 | 210 | 210 |
| | | | | D | 183 | 179 | 175 | 172 | 168 | 165 | 162 | 210 | 210 | 210 | 210 | 210 | 210 | 210 |
| ICSL-12 | 6" | 4 nails | 243 | B | 210 | 210 | 210 | 210 | 210 | 210 | 210 | 210 | 210 | 210 | 210 | 210 | 210 | 210 |
| | | | | C | 210 | 210 | 210 | 210 | 210 | 210 | 209 | 210 | 210 | 210 | 210 | 210 | 210 | 210 |
| | | | | D | 210 | 210 | 210 | 206 | 201 | 197 | 194 | 210 | 210 | 210 | 210 | 210 | 210 | 210 |
| ICSL-13 | 7.5" | 2 nails | 133 | B | 210 | 208 | 202 | 196 | 191 | 185 | 180 | 210 | 210 | 210 | 210 | 210 | 210 | 210 |
| | | | | C | 178 | 173 | 169 | 166 | 161 | 157 | 154 | 210 | 210 | 210 | 210 | 210 | 207 | 203 |
| | | | | D | 162 | 158 | 155 | 152 | 149 | 146 | 143 | 210 | 208 | 204 | 201 | 196 | 192 | 189 |
| ICSL-14 | 7.5" | 4 nails | 227 | B | 210 | 210 | 210 | 210 | 210 | 210 | 210 | 210 | 210 | 210 | 210 | 210 | 210 | 210 |
| | | | | C | 210 | 210 | 210 | 210 | 210 | 205 | 202 | 210 | 210 | 210 | 210 | 210 | 210 | 210 |
| | | | | D | 210 | 206 | 203 | 199 | 194 | 190 | 187 | 210 | 210 | 210 | 210 | 210 | 210 | 210 |
| ICSL-15 | 7.5" | 2 screws | 231 | B | 210 | 210 | 210 | 210 | 210 | 210 | 210 | 210 | 210 | 210 | 210 | 210 | 210 | 210 |
| | | | | C | 210 | 210 | 210 | 210 | 210 | 207 | 204 | 210 | 210 | 210 | 210 | 210 | 210 | 210 |
| | | | | D | 210 | 208 | 204 | 201 | 196 | 192 | 189 | 210 | 210 | 210 | 210 | 210 | 210 | 210 |
| **GABLE ROOFS (SLOPE 4.5:12 – 6.1:12)** | | | | | | | | | | | | | | | | | | |
| ICSL-11 | 6" | 2 nails | 170 | B | 210 | 210 | 210 | 210 | 210 | 210 | 210 | 210 | 210 | 210 | 210 | 210 | 210 | 210 |
| | | | | C | 210 | 210 | 209 | 204 | 198 | 194 | 190 | 210 | 210 | 210 | 210 | 210 | 210 | 210 |
| | | | | D | 199 | 195 | 191 | 188 | 183 | 180 | 177 | 210 | 210 | 210 | 210 | 210 | 210 | 210 |
| ICSL-12 | 6" | 4 nails | 243 | B | 210 | 210 | 210 | 210 | 210 | 210 | 210 | 210 | 210 | 210 | 210 | 210 | 210 | 210 |
| | | | | C | 210 | 210 | 210 | 210 | 210 | 210 | 210 | 210 | 210 | 210 | 210 | 210 | 210 | 210 |
| | | | | D | 210 | 210 | 210 | 210 | 210 | 210 | 210 | 210 | 210 | 210 | 210 | 210 | 210 | 210 |
| ICSL-13 | 7.5" | 2 nails | 133 | B | 210 | 210 | 210 | 210 | 208 | 201 | 196 | 210 | 210 | 210 | 210 | 210 | 210 | 210 |
| | | | | C | 194 | 189 | 185 | 181 | 176 | 171 | 168 | 210 | 210 | 210 | 210 | 210 | 210 | 210 |
| | | | | D | 176 | 172 | 169 | 166 | 162 | 159 | 156 | 210 | 210 | 210 | 210 | 210 | 210 | 210 |
| ICSL-14 | 7.5" | 4 nails | 227 | B | 210 | 210 | 210 | 210 | 210 | 210 | 210 | 210 | 210 | 210 | 210 | 210 | 210 | 210 |
| | | | | C | 210 | 210 | 210 | 210 | 210 | 210 | 210 | 210 | 210 | 210 | 210 | 210 | 210 | 210 |
| | | | | D | 210 | 210 | 210 | 210 | 210 | 207 | 204 | 210 | 210 | 210 | 210 | 210 | 210 | 210 |
| ICSL-15 | 7.5" | 2 screws | 231 | B | 210 | 210 | 210 | 210 | 210 | 210 | 210 | 210 | 210 | 210 | 210 | 210 | 210 | 210 |
| | | | | C | 210 | 210 | 210 | 210 | 210 | 210 | 210 | 210 | 210 | 210 | 210 | 210 | 210 | 210 |
| | | | | D | 210 | 210 | 210 | 210 | 210 | 209 | 206 | 210 | 210 | 210 | 210 | 210 | 210 | 210 |
| **GABLE ROOFS (SLOPE 6.2:12 – 12:12)** | | | | | | | | | | | | | | | | | | |
| ICSL-11 | 6" | 2 nails | 170 | B | 210 | 210 | 210 | 210 | 210 | 210 | 210 | 210 | 210 | 210 | 210 | 210 | 210 | 210 |
| | | | | C | 210 | 210 | 210 | 210 | 210 | 210 | 207 | 210 | 210 | 210 | 210 | 210 | 210 | 210 |
| | | | | D | 210 | 210 | 208 | 205 | 200 | 196 | 193 | 210 | 210 | 210 | 210 | 210 | 210 | 210 |
| ICSL-12 | 6" | 4 nails | 243 | B | 210 | 210 | 210 | 210 | 210 | 210 | 210 | 210 | 210 | 210 | 210 | 210 | 210 | 210 |
| | | | | C | 210 | 210 | 210 | 210 | 210 | 210 | 210 | 210 | 210 | 210 | 210 | 210 | 210 | 210 |
| | | | | D | 210 | 210 | 210 | 210 | 210 | 210 | 210 | 210 | 210 | 210 | 210 | 210 | 210 | 210 |
| ICSL-13 | 7.5" | 2 nails | 133 | B | 210 | 210 | 210 | 210 | 210 | 210 | 210 | 210 | 210 | 210 | 210 | 210 | 210 | 210 |
| | | | | C | 210 | 206 | 201 | 197 | 191 | 187 | 183 | 210 | 210 | 210 | 210 | 210 | 210 | 210 |
| | | | | D | 192 | 188 | 184 | 181 | 177 | 173 | 170 | 210 | 210 | 210 | 210 | 205 | 201 | 198 |
| ICSL-14 | 7.5" | 4 nails | 227 | B | 210 | 210 | 210 | 210 | 210 | 210 | 210 | 210 | 210 | 210 | 210 | 210 | 210 | 210 |
| | | | | C | 210 | 210 | 210 | 210 | 210 | 210 | 210 | 210 | 210 | 210 | 210 | 210 | 210 | 210 |
| | | | | D | 210 | 210 | 210 | 210 | 210 | 210 | 210 | 210 | 210 | 210 | 210 | 210 | 210 | 210 |
| ICSL-15 | 7.5" | 2 screws | 231 | B | 210 | 210 | 210 | 210 | 210 | 210 | 210 | 210 | 210 | 210 | 210 | 210 | 210 | 210 |
| | | | | C | 210 | 210 | 210 | 210 | 210 | 210 | 210 | 210 | 210 | 210 | 210 | 210 | 210 | 210 |
| | | | | D | 210 | 210 | 210 | 210 | 210 | 210 | 210 | 210 | 210 | 210 | 210 | 210 | 210 | 210 |
| ROOF OVERHANG REDUCTION FACTOR[11] | | | | | 0.85 | | | | | | | 0.79 | | | | | | |

**See *Table C6. 1* on page 38 for assembly details, and *General Notes for APPENDIX C2* – APPENDIX C8 on page *13* for referenced superscript table notes.**


www.bocaengineering.com BOCA ENGINEERING CO. info@bocaengineering.com
Greater Victoria Area: (250) 477-7777 203-1001 Cloverdale Ave., Victoria BC V8X 4C9
Metro Vancouver: (604) 385-5210 1567 Brearley St., White Rock BC V4B 3M6

**Table C6. 7: Inspire Classic Slate Maximum Wind Speeds of Hip Roof Cladding–2026 FBC (HVHZ & Non-HVHZ); 2025 CBC; 2024 & 2021 IBC |5/8" PLYWOOD|**

| System No.[1] | Max Shingle Exposure | Shingle Fastener[4] | Allowable Pressure (psf) (ASD)[5,6] | Exposure Category[7] | ZONE 2/3 (CORNER/EDGE)[8] Maximum Wind Speed $V_{ult}$ (mph)[9,10,11] Building Height (ft)[12,13] | | | | | | | ZONE 1 (FIELD)[8] Maximum Wind Speed $V_{ult}$ (mph)[9,10,11] Building Height (ft)[12,13] | | | | | | |
|---|---|---|---|---|---|---|---|---|---|---|---|---|---|---|---|---|---|---|
| | | | | | 15 | 20 | 25 | 30 | 40 | 50 | 60 | 15 | 20 | 25 | 30 | 40 | 50 | 60 |
| **HIP ROOFS (SLOPE 3:12 – 4.4:12)** | | | | | | | | | | | | | | | | | | |
| ICSL-11 | 6" | 2 nails | 170 | B | 210 | 210 | 210 | 210 | 210 | 210 | 210 | 210 | 210 | 210 | 210 | 210 | 210 | 210 |
| | | | | C | 210 | 210 | 210 | 210 | 210 | 207 | 204 | 210 | 210 | 210 | 210 | 210 | 210 | 210 |
| | | | | D | 210 | 208 | 204 | 201 | 196 | 192 | 189 | 210 | 210 | 210 | 210 | 210 | 210 | 210 |
| ICSL-12 | 6" | 4 nails | 243 | B | 210 | 210 | 210 | 210 | 210 | 210 | 210 | 210 | 210 | 210 | 210 | 210 | 210 | 210 |
| | | | | C | 210 | 210 | 210 | 210 | 210 | 210 | 210 | 210 | 210 | 210 | 210 | 210 | 210 | 210 |
| | | | | D | 210 | 210 | 210 | 210 | 210 | 210 | 210 | 210 | 210 | 210 | 210 | 210 | 210 | 210 |
| ICSL-13 | 7.5" | 2 nails | 133 | B | 210 | 210 | 210 | 210 | 210 | 210 | 210 | 210 | 210 | 210 | 210 | 210 | 210 | 210 |
| | | | | C | 208 | 202 | 197 | 193 | 188 | 183 | 180 | 210 | 210 | 210 | 210 | 210 | 210 | 210 |
| | | | | D | 189 | 184 | 181 | 178 | 173 | 170 | 167 | 210 | 210 | 210 | 210 | 205 | 201 | 198 |
| ICSL-14 | 7.5" | 4 nails | 227 | B | 210 | 210 | 210 | 210 | 210 | 210 | 210 | 210 | 210 | 210 | 210 | 210 | 210 | 210 |
| | | | | C | 210 | 210 | 210 | 210 | 210 | 210 | 210 | 210 | 210 | 210 | 210 | 210 | 210 | 210 |
| | | | | D | 210 | 210 | 210 | 210 | 210 | 210 | 210 | 210 | 210 | 210 | 210 | 210 | 210 | 210 |
| ICSL-15 | 7.5" | 2 screws | 231 | B | 210 | 210 | 210 | 210 | 210 | 210 | 210 | 210 | 210 | 210 | 210 | 210 | 210 | 210 |
| | | | | C | 210 | 210 | 210 | 210 | 210 | 210 | 210 | 210 | 210 | 210 | 210 | 210 | 210 | 210 |
| | | | | D | 210 | 210 | 210 | 210 | 210 | 210 | 210 | 210 | 210 | 210 | 210 | 210 | 210 | 210 |
| **HIP ROOFS (SLOPE 4.5:12 – 6.1:12)** | | | | | | | | | | | | | | | | | | |
| ICSL-11 | 6" | 2 nails | 170 | B | 210 | 210 | 210 | 210 | 210 | 210 | 210 | 210 | 210 | 210 | 210 | 210 | 210 | 210 |
| | | | | C | 210 | 210 | 210 | 210 | 210 | 210 | 210 | 210 | 210 | 210 | 210 | 210 | 210 | 210 |
| | | | | D | 210 | 210 | 210 | 210 | 210 | 210 | 210 | 210 | 210 | 210 | 210 | 210 | 210 | 210 |
| ICSL-12 | 6" | 4 nails | 243 | B | 210 | 210 | 210 | 210 | 210 | 210 | 210 | 210 | 210 | 210 | 210 | 210 | 210 | 210 |
| | | | | C | 210 | 210 | 210 | 210 | 210 | 210 | 210 | 210 | 210 | 210 | 210 | 210 | 210 | 210 |
| | | | | D | 210 | 210 | 210 | 210 | 210 | 210 | 210 | 210 | 210 | 210 | 210 | 210 | 210 | 210 |
| ICSL-13 | 7.5" | 2 nails | 133 | B | 210 | 210 | 210 | 210 | 210 | 210 | 210 | 210 | 210 | 210 | 210 | 210 | 210 | 210 |
| | | | | C | 210 | 210 | 210 | 210 | 210 | 207 | 203 | 210 | 210 | 210 | 210 | 210 | 210 | 210 |
| | | | | D | 210 | 208 | 204 | 201 | 196 | 192 | 189 | 210 | 210 | 210 | 210 | 210 | 210 | 210 |
| ICSL-14 | 7.5" | 4 nails | 227 | B | 210 | 210 | 210 | 210 | 210 | 210 | 210 | 210 | 210 | 210 | 210 | 210 | 210 | 210 |
| | | | | C | 210 | 210 | 210 | 210 | 210 | 210 | 210 | 210 | 210 | 210 | 210 | 210 | 210 | 210 |
| | | | | D | 210 | 210 | 210 | 210 | 210 | 210 | 210 | 210 | 210 | 210 | 210 | 210 | 210 | 210 |
| ICSL-15 | 7.5" | 2 screws | 231 | B | 210 | 210 | 210 | 210 | 210 | 210 | 210 | 210 | 210 | 210 | 210 | 210 | 210 | 210 |
| | | | | C | 210 | 210 | 210 | 210 | 210 | 210 | 210 | 210 | 210 | 210 | 210 | 210 | 210 | 210 |
| | | | | D | 210 | 210 | 210 | 210 | 210 | 210 | 210 | 210 | 210 | 210 | 210 | 210 | 210 | 210 |
| **HIP ROOFS (SLOPE 6.2:12 – 12:12)** | | | | | | | | | | | | | | | | | | |
| ICSL-11 | 6" | 2 nails | 170 | B | 210 | 210 | 210 | 210 | 210 | 210 | 210 | 210 | 210 | 210 | 210 | 210 | 210 | 210 |
| | | | | C | 210 | 210 | 210 | 210 | 210 | 210 | 210 | 210 | 210 | 210 | 210 | 210 | 210 | 210 |
| | | | | D | 210 | 210 | 210 | 209 | 203 | 199 | 196 | 210 | 210 | 210 | 210 | 210 | 210 | 210 |
| ICSL-12 | 6" | 4 nails | 243 | B | 210 | 210 | 210 | 210 | 210 | 210 | 210 | 210 | 210 | 210 | 210 | 210 | 210 | 210 |
| | | | | C | 210 | 210 | 210 | 210 | 210 | 210 | 210 | 210 | 210 | 210 | 210 | 210 | 210 | 210 |
| | | | | D | 210 | 210 | 210 | 210 | 210 | 210 | 210 | 210 | 210 | 210 | 210 | 210 | 210 | 210 |
| ICSL-13 | 7.5" | 2 nails | 133 | B | 210 | 210 | 210 | 210 | 210 | 210 | 210 | 210 | 210 | 210 | 210 | 210 | 210 | 210 |
| | | | | C | 210 | 209 | 205 | 201 | 195 | 190 | 187 | 210 | 210 | 210 | 210 | 210 | 210 | 210 |
| | | | | D | 196 | 191 | 188 | 184 | 180 | 176 | 174 | 210 | 210 | 210 | 210 | 210 | 210 | 210 |
| ICSL-14 | 7.5" | 4 nails | 227 | B | 210 | 210 | 210 | 210 | 210 | 210 | 210 | 210 | 210 | 210 | 210 | 210 | 210 | 210 |
| | | | | C | 210 | 210 | 210 | 210 | 210 | 210 | 210 | 210 | 210 | 210 | 210 | 210 | 210 | 210 |
| | | | | D | 210 | 210 | 210 | 210 | 210 | 210 | 210 | 210 | 210 | 210 | 210 | 210 | 210 | 210 |
| ICSL-15 | 7.5" | 2 screws | 231 | B | 210 | 210 | 210 | 210 | 210 | 210 | 210 | 210 | 210 | 210 | 210 | 210 | 210 | 210 |
| | | | | C | 210 | 210 | 210 | 210 | 210 | 210 | 210 | 210 | 210 | 210 | 210 | 210 | 210 | 210 |
| | | | | D | 210 | 210 | 210 | 210 | 210 | 210 | 210 | 210 | 210 | 210 | 210 | 210 | 210 | 210 |
| ROOF OVERHANG REDUCTION FACTOR[11] | | | | | 0.83 | | | | | | | N/A | | | | | | |

**See *Table C6. 1* on page 38 for assembly details, and *General Notes for APPENDIX C2* – APPENDIX C8 on page *13* for referenced superscript table notes.**

## APPENDIX C7: PROVINCE SLATE (PSL) WIND PRESSURE & WIND SPEED TABLES

**Table C7. 1: Province Slate Assembly Configurations**

| System No.[1] | Min Sheathing[2,3] | Max Shingle Exposure | Shingle Fasteners[4] | Allowable Pressure[5,6] (psf)(ASD) |
|---|---|---|---|---|
| **PSL-1** | 7/16" OSB | 8" | 2 nails per shingle, 11ga 1.75-inch galvanized ring-shank roofing nails | 51 |
| **PSL-2** | 7/16" OSB | 8" | 4 nails per shingle, 11ga 1.75-inch galvanized ring-shank roofing nails | 89 |
| **PSL-3** | 7/16" OSB | 8" | 2 screws per shingle, #10 2-inch wafer head screws | 140 |
| **PSL-4** | 7/16" OSB | 8" | 4 screws per shingle, #10 2-inch wafer head screws | 170 |
| **PSL-5** | 1/2" Plywood | 8" | 2 nails per shingle, 11ga 1.75-inch galvanized ring-shank roofing nails | 69 |
| **PSL-6** | 1/2" Plywood | 8" | 4 nails per shingle, 11ga 1.75-inch galvanized ring-shank roofing nails | 119 |
| **PSL-7** | 1/2" Plywood | 8" | 2 screws per shingle, #10 2-inch wafer head screws | 187 |
| **PSL-8** | 1/2" Plywood | 8" | 4 screws per shingle, #10 2-inch wafer head screws | 226 |
| **PSL-9** | 5/8" Plywood | 8" | 2 nails per shingle, 11ga 1.75-inch galvanized ring-shank roofing nails | 103 |
| **PSL-10** | 5/8" Plywood | 8" | 4 nails per shingle, 11ga 1.75-inch galvanized ring-shank roofing nails | 214 |
| **PSL-11** | 5/8" Plywood | 8" | 2 screws per shingle, #10 2-inch wafer head screws | 187 |
| **PSL-12** | 5/8" Plywood | 8" | 4 screws per shingle, #10 2-inch wafer head screws | 226 |

**See *General Notes for APPENDIX C2 – APPENDIX C8* on page *13* for referenced superscript table notes.**

In accordance with the 2026 Florida Building Code (FBC), minimum 19/32-inch (5/8") plywood or wood planks must be installed for new roof deck construction in HVHZ regions.

Unless noted otherwise, the published allowable pressure (ASD) values apply to HVHZ and Non-HVHZ applications, and include a safety factor of 2.

**<WIND SPEED TABLES BEGIN NEXT PAGE>**


www.bocaengineering.com BOCA ENGINEERING CO. info@bocaengineering.com
Greater Victoria Area: (250) 477-7777 203-1001 Cloverdale Ave., Victoria BC V8X 4C9
Metro Vancouver: (604) 385-5210 1567 Brearley St., White Rock BC V4B 3M6

**Table C7. 2: Province Slate Maximum Wind Speeds of Gable Roof Cladding – 2026 FBC (Non-HVHZ); 2025 CBC; 2024 & 2021 IBC |7/16" OSB|**

| System No.[1] | Max Shingle Exposure | Shingle Fastener[4] | Allowable Pressure (psf) (ASD)[5,6] | Exposure Category[7] | ZONE 2/3 (CORNER/EDGE)[8] Maximum Wind Speed $V_{ult}$ (mph)[9,10,11] Building Height (ft)[12,13] | | | | | | | ZONE 1 (FIELD)[8] Maximum Wind Speed $V_{ult}$ (mph)[9,10,11] Building Height (ft)[12,13] | | | | | | |
|---|---|---|---|---|---|---|---|---|---|---|---|---|---|---|---|---|---|---|
| | | | | | 15 | 20 | 25 | 30 | 40 | 50 | 60 | 15 | 20 | 25 | 30 | 40 | 50 | 60 |
| **GABLE ROOFS (SLOPE 3:12 – 4.4:12)** | | | | | | | | | | | | | | | | | | |
| PSL-1 | 8" | 2 nails | 51 | B | 135 | 129 | 125 | 122 | 118 | 114 | 112 | 177 | 170 | 165 | 160 | 156 | 151 | 147 |
| | | | | C | 110 | 107 | NA | NA | NA | NA | NA | 145 | 141 | 138 | 135 | 131 | 128 | 126 |
| | | | | D | NA | NA | NA | NA | NA | NA | NA | 132 | 129 | 126 | 124 | 121 | 119 | 117 |
| PSL-2 | 8" | 4 nails | 89 | B | 178 | 171 | 165 | 161 | 156 | 151 | 147 | 210 | 210 | 210 | 210 | 206 | 199 | 194 |
| | | | | C | 146 | 142 | 139 | 136 | 132 | 129 | 126 | 192 | 186 | 182 | 179 | 173 | 169 | 166 |
| | | | | D | 132 | 129 | 127 | 125 | 122 | 119 | 117 | 174 | 170 | 167 | 164 | 160 | 157 | 154 |
| PSL-3 | 8" | 2 screws | 140 | B | 210 | 210 | 207 | 201 | 196 | 189 | 185 | 210 | 210 | 210 | 210 | 210 | 210 | 210 |
| | | | | C | 183 | 178 | 174 | 170 | 165 | 161 | 158 | 210 | 210 | 210 | 210 | 210 | 210 | 209 |
| | | | | D | 166 | 162 | 159 | 156 | 152 | 149 | 147 | 210 | 210 | 210 | 206 | 201 | 197 | 194 |
| PSL-4 | 8" | 4 screws | 170 | B | 210 | 210 | 210 | 210 | 210 | 209 | 204 | 210 | 210 | 210 | 210 | 210 | 210 | 210 |
| | | | | C | 201 | 196 | 191 | 187 | 182 | 178 | 175 | 210 | 210 | 210 | 210 | 210 | 210 | 210 |
| | | | | D | 183 | 179 | 175 | 172 | 168 | 165 | 162 | 210 | 210 | 210 | 210 | 210 | 210 | 210 |
| **GABLE ROOFS (SLOPE 4.5:12 – 6.1:12)** | | | | | | | | | | | | | | | | | | |
| PSL-1 | 8" | 2 nails | 51 | B | 147 | 141 | 136 | 132 | 129 | 125 | 122 | 202 | 194 | 188 | 182 | 177 | 172 | 167 |
| | | | | C | 120 | 117 | 114 | 112 | 109 | 106 | NA | 165 | 161 | 157 | 154 | 150 | 146 | 143 |
| | | | | D | 109 | 107 | NA | NA | NA | NA | NA | 150 | 147 | 144 | 142 | 138 | 135 | 133 |
| PSL-2 | 8" | 4 nails | 89 | B | 194 | 186 | 180 | 175 | 170 | 165 | 161 | 210 | 210 | 210 | 210 | 210 | 210 | 210 |
| | | | | C | 159 | 154 | 151 | 148 | 144 | 140 | 138 | 210 | 210 | 208 | 203 | 198 | 193 | 189 |
| | | | | D | 144 | 141 | 138 | 136 | 133 | 130 | 128 | 198 | 194 | 190 | 187 | 182 | 179 | 176 |
| PSL-3 | 8" | 2 screws | 140 | B | 210 | 210 | 210 | 210 | 210 | 207 | 202 | 210 | 210 | 210 | 210 | 210 | 210 | 210 |
| | | | | C | 199 | 194 | 189 | 185 | 180 | 176 | 173 | 210 | 210 | 210 | 210 | 210 | 210 | 210 |
| | | | | D | 181 | 177 | 174 | 170 | 166 | 163 | 160 | 210 | 210 | 210 | 210 | 210 | 210 | 210 |
| PSL-4 | 8" | 4 screws | 170 | B | 210 | 210 | 210 | 210 | 210 | 210 | 210 | 210 | 210 | 210 | 210 | 210 | 210 | 210 |
| | | | | C | 210 | 210 | 209 | 204 | 198 | 194 | 190 | 210 | 210 | 210 | 210 | 210 | 210 | 210 |
| | | | | D | 199 | 195 | 191 | 188 | 183 | 180 | 177 | 210 | 210 | 210 | 210 | 210 | 210 | 210 |
| **GABLE ROOFS (SLOPE 6.2:12 – 12:12)** | | | | | | | | | | | | | | | | | | |
| PSL-1 | 8" | 2 nails | 51 | B | 160 | 153 | 149 | 144 | 140 | 136 | 133 | 186 | 178 | 173 | 168 | 163 | 158 | 154 |
| | | | | C | 131 | 127 | 125 | 122 | 118 | 116 | 114 | 152 | 148 | 145 | 142 | 138 | 135 | 132 |
| | | | | D | 119 | 116 | 114 | 112 | 109 | 107 | 105 | 138 | 135 | 133 | 130 | 127 | 125 | 123 |
| PSL-2 | 8" | 4 nails | 89 | B | 210 | 203 | 196 | 191 | 185 | 179 | 175 | 210 | 210 | 210 | 210 | 210 | 209 | 204 |
| | | | | C | 173 | 168 | 164 | 161 | 156 | 153 | 150 | 201 | 196 | 191 | 187 | 182 | 178 | 175 |
| | | | | D | 157 | 153 | 151 | 148 | 144 | 142 | 139 | 183 | 179 | 175 | 172 | 168 | 165 | 162 |
| PSL-3 | 8" | 2 screws | 140 | B | 210 | 210 | 210 | 210 | 210 | 210 | 210 | 210 | 210 | 210 | 210 | 210 | 210 | 210 |
| | | | | C | 210 | 210 | 206 | 202 | 196 | 192 | 188 | 210 | 210 | 210 | 210 | 210 | 210 | 210 |
| | | | | D | 197 | 192 | 189 | 186 | 181 | 177 | 175 | 210 | 210 | 210 | 210 | 210 | 207 | 203 |
| PSL-4 | 8" | 4 screws | 170 | B | 210 | 210 | 210 | 210 | 210 | 210 | 210 | 210 | 210 | 210 | 210 | 210 | 210 | 210 |
| | | | | C | 210 | 210 | 210 | 210 | 210 | 210 | 207 | 210 | 210 | 210 | 210 | 210 | 210 | 210 |
| | | | | D | 210 | 210 | 208 | 205 | 200 | 196 | 193 | 210 | 210 | 210 | 210 | 210 | 210 | 210 |
| ROOF OVERHANG REDUCTION FACTOR[11] | | | | | 0.85 | | | | | | | 0.79 | | | | | | |

***See Table C7. 1 on page* 45 for assembly details, and *General Notes for APPENDIX C2* – APPENDIX C8 on page *13* for referenced superscript table notes.**


www.bocaengineering.com BOCA ENGINEERING CO. info@bocaengineering.com
Greater Victoria Area: (250) 477-7777 203-1001 Cloverdale Ave., Victoria BC V8X 4C9
Metro Vancouver: (604) 385-5210 1567 Brearley St., White Rock BC V4B 3M6

**Table C7. 3: Province Slate Maximum Wind Speeds of Hip Roof Cladding – 2026 FBC (Non-HVHZ); 2025 CBC; 2024 & 2021 IBC |7/16" OSB|**

| System No.[1] | Max Shingle Exposure | Shingle Fastener[4] | Allowable Pressure (psf) (ASD)[5,6] | Exposure Category[7] | ZONE 2/3 (CORNER/EDGE)[8] Maximum Wind Speed $V_{ult}$ (mph)[9,10,11] Building Height (ft)[12,13] | | | | | | | ZONE 1 (FIELD)[8] Maximum Wind Speed $V_{ult}$ (mph)[9,10,11] Building Height (ft)[12,13] | | | | | | |
|---|---|---|---|---|---|---|---|---|---|---|---|---|---|---|---|---|---|---|
| | | | | | 15 | 20 | 25 | 30 | 40 | 50 | 60 | 15 | 20 | 25 | 30 | 40 | 50 | 60 |
| **HIP ROOFS (SLOPE 3:12 – 4.4:12)** | | | | | | | | | | | | | | | | | | |
| PSL-1 | 8" | 2 nails | 51 | B | 157 | 151 | 146 | 142 | 138 | 133 | 130 | 186 | 178 | 173 | 168 | 163 | 158 | 154 |
| | | | | C | 129 | 125 | 122 | 120 | 116 | 114 | 112 | 152 | 148 | 145 | 142 | 138 | 135 | 132 |
| | | | | D | 117 | 114 | 112 | 110 | 107 | 105 | NA | 138 | 135 | 133 | 130 | 127 | 125 | 123 |
| PSL-2 | 8" | 4 nails | 89 | B | 207 | 199 | 193 | 187 | 182 | 176 | 172 | 210 | 210 | 210 | 210 | 210 | 209 | 204 |
| | | | | C | 170 | 165 | 162 | 158 | 154 | 150 | 147 | 201 | 196 | 191 | 187 | 182 | 178 | 175 |
| | | | | D | 154 | 151 | 148 | 145 | 142 | 139 | 137 | 183 | 179 | 175 | 172 | 168 | 165 | 162 |
| PSL-3 | 8" | 2 screws | 140 | B | 210 | 210 | 210 | 210 | 210 | 210 | 210 | 210 | 210 | 210 | 210 | 210 | 210 | 210 |
| | | | | C | 210 | 207 | 203 | 198 | 193 | 188 | 185 | 210 | 210 | 210 | 210 | 210 | 210 | 210 |
| | | | | D | 194 | 189 | 186 | 182 | 178 | 174 | 172 | 210 | 210 | 210 | 210 | 210 | 207 | 203 |
| PSL-4 | 8" | 4 screws | 170 | B | 210 | 210 | 210 | 210 | 210 | 210 | 210 | 210 | 210 | 210 | 210 | 210 | 210 | 210 |
| | | | | C | 210 | 210 | 210 | 210 | 210 | 207 | 204 | 210 | 210 | 210 | 210 | 210 | 210 | 210 |
| | | | | D | 210 | 208 | 204 | 201 | 196 | 192 | 189 | 210 | 210 | 210 | 210 | 210 | 210 | 210 |
| **HIP ROOFS (SLOPE 4.5:12 – 6.1:12)** | | | | | | | | | | | | | | | | | | |
| PSL-1 | 8" | 2 nails | 51 | B | 177 | 170 | 165 | 160 | 156 | 151 | 147 | 208 | 200 | 194 | 188 | 183 | 177 | 173 |
| | | | | C | 145 | 141 | 138 | 135 | 131 | 128 | 126 | 171 | 166 | 162 | 159 | 154 | 151 | 148 |
| | | | | D | 132 | 129 | 126 | 124 | 121 | 119 | 117 | 155 | 151 | 149 | 146 | 142 | 140 | 137 |
| PSL-2 | 8" | 4 nails | 89 | B | 210 | 210 | 210 | 210 | 206 | 199 | 194 | 210 | 210 | 210 | 210 | 210 | 210 | 210 |
| | | | | C | 192 | 186 | 182 | 179 | 173 | 169 | 166 | 210 | 210 | 210 | 210 | 204 | 199 | 195 |
| | | | | D | 174 | 170 | 167 | 164 | 160 | 157 | 154 | 205 | 200 | 196 | 193 | 188 | 184 | 181 |
| PSL-3 | 8" | 2 screws | 140 | B | 210 | 210 | 210 | 210 | 210 | 210 | 210 | 210 | 210 | 210 | 210 | 210 | 210 | 210 |
| | | | | C | 210 | 210 | 210 | 210 | 210 | 210 | 209 | 210 | 210 | 210 | 210 | 210 | 210 | 210 |
| | | | | D | 210 | 210 | 210 | 206 | 201 | 197 | 194 | 210 | 210 | 210 | 210 | 210 | 210 | 210 |
| PSL-4 | 8" | 4 screws | 170 | B | 210 | 210 | 210 | 210 | 210 | 210 | 210 | 210 | 210 | 210 | 210 | 210 | 210 | 210 |
| | | | | C | 210 | 210 | 210 | 210 | 210 | 210 | 210 | 210 | 210 | 210 | 210 | 210 | 210 | 210 |
| | | | | D | 210 | 210 | 210 | 210 | 210 | 210 | 210 | 210 | 210 | 210 | 210 | 210 | 210 | 210 |
| **HIP ROOFS (SLOPE 6.2:12 – 12:12)** | | | | | | | | | | | | | | | | | | |
| PSL-1 | 8" | 2 nails | 51 | B | 163 | 156 | 151 | 147 | 143 | 138 | 135 | 202 | 194 | 188 | 182 | 177 | 172 | 167 |
| | | | | C | 133 | 130 | 127 | 124 | 121 | 118 | 116 | 165 | 161 | 157 | 154 | 150 | 146 | 143 |
| | | | | D | 121 | 118 | 116 | 114 | 111 | 109 | 108 | 150 | 147 | 144 | 142 | 138 | 135 | 133 |
| PSL-2 | 8" | 4 nails | 89 | B | 210 | 206 | 200 | 194 | 189 | 183 | 178 | 210 | 210 | 210 | 210 | 210 | 210 | 210 |
| | | | | C | 176 | 171 | 168 | 164 | 159 | 156 | 153 | 210 | 210 | 208 | 203 | 198 | 193 | 189 |
| | | | | D | 160 | 156 | 154 | 151 | 147 | 144 | 142 | 198 | 194 | 190 | 187 | 182 | 179 | 176 |
| PSL-3 | 8" | 2 screws | 140 | B | 210 | 210 | 210 | 210 | 210 | 210 | 210 | 210 | 210 | 210 | 210 | 210 | 210 | 210 |
| | | | | C | 210 | 210 | 210 | 206 | 200 | 195 | 192 | 210 | 210 | 210 | 210 | 210 | 210 | 210 |
| | | | | D | 201 | 196 | 193 | 189 | 185 | 181 | 178 | 210 | 210 | 210 | 210 | 210 | 210 | 210 |
| PSL-4 | 8" | 4 screws | 170 | B | 210 | 210 | 210 | 210 | 210 | 210 | 210 | 210 | 210 | 210 | 210 | 210 | 210 | 210 |
| | | | | C | 210 | 210 | 210 | 210 | 210 | 210 | 210 | 210 | 210 | 210 | 210 | 210 | 210 | 210 |
| | | | | D | 210 | 210 | 210 | 209 | 203 | 199 | 196 | 210 | 210 | 210 | 210 | 210 | 210 | 210 |
| ROOF OVERHANG REDUCTION FACTOR[11] | | | | | 0.83 | | | | | | | N/A | | | | | | |

**See *Table C7. 1* on page 45 for assembly details, and *General Notes for APPENDIX C2* – APPENDIX C8 on page *13* for referenced superscript table notes.**


www.bocaengineering.com BOCA ENGINEERING CO. info@bocaengineering.com
Greater Victoria Area: (250) 477-7777 203-1001 Cloverdale Ave., Victoria BC V8X 4C9
Metro Vancouver: (604) 385-5210 1567 Brearley St., White Rock BC V4B 3M6

**Table C7. 4: Province Slate Maximum Wind Speeds of Gable Roof Cladding – 2026 FBC (HVHZ & Non-HVHZ); 2025 CBC; 2024 & 2021 IBC |1/2" PLYWOOD|**

| System No.[1] | Max Shingle Exposure | Shingle Fastener[4] | Allowable Pressure (psf) (ASD)[5,6] | Exposure Category[7] | ZONE 2/3 (CORNER/EDGE)[8] Maximum Wind Speed $V_{ult}$ (mph)[9,10,11] Building Height (ft)[12,13] | | | | | | | ZONE 1 (FIELD)[8] Maximum Wind Speed $V_{ult}$ (mph)[9,10,11] Building Height (ft)[12,13] | | | | | | |
|---|---|---|---|---|---|---|---|---|---|---|---|---|---|---|---|---|---|---|
| | | | | | 15 | 20 | 25 | 30 | 40 | 50 | 60 | 15 | 20 | 25 | 30 | 40 | 50 | 60 |
| **GABLE ROOFS (SLOPE 3:12 – 4.4:12)** | | | | | | | | | | | | | | | | | | |
| PSL-5 | 8" | 2 nails | 69 | B | 157 | 150 | 146 | 141 | 137 | 133 | 130 | 206 | 198 | 192 | 186 | 181 | 175 | 171 |
| | | | | C | 128 | 125 | 122 | 119 | 116 | 113 | 111 | 169 | 164 | 161 | 157 | 153 | 149 | 146 |
| | | | | D | 117 | 114 | 112 | 110 | 107 | NA | NA | 153 | 150 | 147 | 145 | 141 | 138 | 136 |
| PSL-6 | 8" | 4 nails | 119 | B | 206 | 197 | 191 | 186 | 181 | 175 | 170 | 210 | 210 | 210 | 210 | 210 | 210 | 210 |
| | | | | C | 168 | 164 | 160 | 157 | 152 | 149 | 146 | 210 | 210 | 210 | 207 | 201 | 196 | 192 |
| | | | | D | 153 | 149 | 147 | 144 | 141 | 138 | 136 | 201 | 197 | 193 | 190 | 185 | 181 | 179 |
| PSL-7 | 8" | 2 screws | 187 | B | 210 | 210 | 210 | 210 | 210 | 210 | 210 | 210 | 210 | 210 | 210 | 210 | 210 | 210 |
| | | | | C | 210 | 205 | 201 | 197 | 191 | 186 | 183 | 210 | 210 | 210 | 210 | 210 | 210 | 210 |
| | | | | D | 192 | 187 | 184 | 181 | 176 | 173 | 170 | 210 | 210 | 210 | 210 | 210 | 210 | 210 |
| PSL-8 | 8" | 4 screws | 226 | B | 210 | 210 | 210 | 210 | 210 | 210 | 210 | 210 | 210 | 210 | 210 | 210 | 210 | 210 |
| | | | | C | 210 | 210 | 210 | 210 | 210 | 205 | 201 | 210 | 210 | 210 | 210 | 210 | 210 | 210 |
| | | | | D | 210 | 206 | 202 | 199 | 194 | 190 | 187 | 210 | 210 | 210 | 210 | 210 | 210 | 210 |
| **GABLE ROOFS (SLOPE 4.5:12 – 6.1:12)** | | | | | | | | | | | | | | | | | | |
| PSL-5 | 8" | 2 nails | 69 | B | 171 | 164 | 159 | 154 | 150 | 145 | 142 | 210 | 210 | 210 | 210 | 206 | 200 | 195 |
| | | | | C | 140 | 136 | 133 | 130 | 126 | 123 | 121 | 192 | 187 | 183 | 179 | 174 | 170 | 167 |
| | | | | D | 127 | 124 | 122 | 120 | 117 | 114 | 113 | 175 | 171 | 168 | 165 | 161 | 157 | 155 |
| PSL-6 | 8" | 4 nails | 119 | B | 210 | 210 | 208 | 202 | 197 | 190 | 186 | 210 | 210 | 210 | 210 | 210 | 210 | 210 |
| | | | | C | 184 | 178 | 175 | 171 | 166 | 162 | 159 | 210 | 210 | 210 | 210 | 210 | 210 | 210 |
| | | | | D | 167 | 163 | 160 | 157 | 153 | 150 | 148 | 210 | 210 | 210 | 210 | 210 | 207 | 204 |
| PSL-7 | 8" | 2 screws | 187 | B | 210 | 210 | 210 | 210 | 210 | 210 | 210 | 210 | 210 | 210 | 210 | 210 | 210 | 210 |
| | | | | C | 210 | 210 | 210 | 210 | 208 | 203 | 200 | 210 | 210 | 210 | 210 | 210 | 210 | 210 |
| | | | | D | 209 | 204 | 201 | 197 | 192 | 188 | 185 | 210 | 210 | 210 | 210 | 210 | 210 | 210 |
| PSL-8 | 8" | 4 screws | 226 | B | 210 | 210 | 210 | 210 | 210 | 210 | 210 | 210 | 210 | 210 | 210 | 210 | 210 | 210 |
| | | | | C | 210 | 210 | 210 | 210 | 210 | 210 | 210 | 210 | 210 | 210 | 210 | 210 | 210 | 210 |
| | | | | D | 210 | 210 | 210 | 210 | 210 | 207 | 204 | 210 | 210 | 210 | 210 | 210 | 210 | 210 |
| **GABLE ROOFS (SLOPE 6.2:12 – 12:12)** | | | | | | | | | | | | | | | | | | |
| PSL-5 | 8" | 2 nails | 69 | B | 186 | 178 | 173 | 168 | 163 | 158 | 154 | 210 | 207 | 201 | 195 | 190 | 184 | 179 |
| | | | | C | 152 | 148 | 145 | 142 | 138 | 135 | 132 | 177 | 172 | 169 | 165 | 160 | 156 | 154 |
| | | | | D | 138 | 135 | 133 | 130 | 127 | 125 | 123 | 161 | 157 | 154 | 152 | 148 | 145 | 143 |
| PSL-6 | 8" | 4 nails | 119 | B | 210 | 210 | 210 | 210 | 210 | 207 | 202 | 210 | 210 | 210 | 210 | 210 | 210 | 210 |
| | | | | C | 200 | 194 | 190 | 186 | 181 | 177 | 173 | 210 | 210 | 210 | 210 | 210 | 206 | 202 |
| | | | | D | 182 | 177 | 174 | 171 | 167 | 164 | 161 | 210 | 206 | 203 | 199 | 194 | 190 | 187 |
| PSL-7 | 8" | 2 screws | 187 | B | 210 | 210 | 210 | 210 | 210 | 210 | 210 | 210 | 210 | 210 | 210 | 210 | 210 | 210 |
| | | | | C | 210 | 210 | 210 | 210 | 210 | 210 | 210 | 210 | 210 | 210 | 210 | 210 | 210 | 210 |
| | | | | D | 210 | 210 | 210 | 210 | 209 | 205 | 202 | 210 | 210 | 210 | 210 | 210 | 210 | 210 |
| PSL-8 | 8" | 4 screws | 226 | B | 210 | 210 | 210 | 210 | 210 | 210 | 210 | 210 | 210 | 210 | 210 | 210 | 210 | 210 |
| | | | | C | 210 | 210 | 210 | 210 | 210 | 210 | 210 | 210 | 210 | 210 | 210 | 210 | 210 | 210 |
| | | | | D | 210 | 210 | 210 | 210 | 210 | 210 | 210 | 210 | 210 | 210 | 210 | 210 | 210 | 210 |
| ROOF OVERHANG REDUCTION FACTOR[11] | | | | | 0.85 | | | | | | | 0.79 | | | | | | |

**See *Table C7. 1* on page 45 for assembly details, and *General Notes for APPENDIX C2* – APPENDIX C8 on page *13* for referenced superscript table notes.**


www.bocaengineering.com BOCA ENGINEERING CO. info@bocaengineering.com
Greater Victoria Area: (250) 477-7777 203-1001 Cloverdale Ave., Victoria BC V8X 4C9
Metro Vancouver: (604) 385-5210 1567 Brearley St., White Rock BC V4B 3M6

**Table C7. 5: Province Slate Maximum Wind Speeds of Hip Roof Cladding – 2026 FBC (HVHZ & Non-HVHZ); 2025 CBC; 2024 & 2021 IBC |1/2" PLYWOOD|**

| System No.[1] | Max Shingle Exposure | Shingle Fastener[4] | Allowable Pressure (psf) (ASD)[5,6] | Exposure Category[7] | ZONE 2/3 (CORNER/EDGE)[8] Maximum Wind Speed $V_{ult}$ (mph)[9,10,11] Building Height (ft)[12,13] | | | | | | | ZONE 1 (FIELD)[8] Maximum Wind Speed $V_{ult}$ (mph)[9,10,11] Building Height (ft)[12,13] | | | | | | |
|---|---|---|---|---|---|---|---|---|---|---|---|---|---|---|---|---|---|---|
| | | | | | 15 | 20 | 25 | 30 | 40 | 50 | 60 | 15 | 20 | 25 | 30 | 40 | 50 | 60 |
| **HIP ROOFS (SLOPE 3:12 – 4.4:12)** | | | | | | | | | | | | | | | | | | |
| PSL-5 | 8" | 2 nails | 69 | B | 183 | 175 | 170 | 165 | 160 | 155 | 151 | 210 | 207 | 201 | 195 | 190 | 184 | 179 |
| | | | | C | 150 | 145 | 142 | 139 | 135 | 132 | 130 | 177 | 172 | 169 | 165 | 160 | 156 | 154 |
| | | | | D | 136 | 133 | 130 | 128 | 125 | 122 | 120 | 161 | 157 | 154 | 152 | 148 | 145 | 143 |
| PSL-6 | 8" | 4 nails | 119 | B | 210 | 210 | 210 | 210 | 210 | 204 | 199 | 210 | 210 | 210 | 210 | 210 | 210 | 210 |
| | | | | C | 196 | 191 | 187 | 183 | 178 | 173 | 170 | 210 | 210 | 210 | 210 | 210 | 206 | 202 |
| | | | | D | 178 | 174 | 171 | 168 | 164 | 161 | 158 | 210 | 206 | 203 | 199 | 194 | 190 | 187 |
| PSL-7 | 8" | 2 screws | 187 | B | 210 | 210 | 210 | 210 | 210 | 210 | 210 | 210 | 210 | 210 | 210 | 210 | 210 | 210 |
| | | | | C | 210 | 210 | 210 | 210 | 210 | 210 | 210 | 210 | 210 | 210 | 210 | 210 | 210 | 210 |
| | | | | D | 210 | 210 | 210 | 210 | 206 | 201 | 198 | 210 | 210 | 210 | 210 | 210 | 210 | 210 |
| PSL-8 | 8" | 4 screws | 226 | B | 210 | 210 | 210 | 210 | 210 | 210 | 210 | 210 | 210 | 210 | 210 | 210 | 210 | 210 |
| | | | | C | 210 | 210 | 210 | 210 | 210 | 210 | 210 | 210 | 210 | 210 | 210 | 210 | 210 | 210 |
| | | | | D | 210 | 210 | 210 | 210 | 210 | 210 | 210 | 210 | 210 | 210 | 210 | 210 | 210 | 210 |
| **HIP ROOFS (SLOPE 4.5:12 – 6.1:12)** | | | | | | | | | | | | | | | | | | |
| PSL-5 | 8" | 2 nails | 69 | B | 206 | 198 | 192 | 186 | 181 | 175 | 171 | 210 | 210 | 210 | 210 | 210 | 206 | 201 |
| | | | | C | 169 | 164 | 161 | 157 | 153 | 149 | 146 | 198 | 193 | 189 | 185 | 179 | 175 | 172 |
| | | | | D | 153 | 150 | 147 | 145 | 141 | 138 | 136 | 180 | 176 | 173 | 170 | 166 | 162 | 160 |
| PSL-6 | 8" | 4 nails | 119 | B | 210 | 210 | 210 | 210 | 210 | 210 | 210 | 210 | 210 | 210 | 210 | 210 | 210 | 210 |
| | | | | C | 210 | 210 | 210 | 207 | 201 | 196 | 192 | 210 | 210 | 210 | 210 | 210 | 210 | 210 |
| | | | | D | 201 | 197 | 193 | 190 | 185 | 181 | 179 | 210 | 210 | 210 | 210 | 210 | 210 | 210 |
| PSL-7 | 8" | 2 screws | 187 | B | 210 | 210 | 210 | 210 | 210 | 210 | 210 | 210 | 210 | 210 | 210 | 210 | 210 | 210 |
| | | | | C | 210 | 210 | 210 | 210 | 210 | 210 | 210 | 210 | 210 | 210 | 210 | 210 | 210 | 210 |
| | | | | D | 210 | 210 | 210 | 210 | 210 | 210 | 210 | 210 | 210 | 210 | 210 | 210 | 210 | 210 |
| PSL-8 | 8" | 4 screws | 226 | B | 210 | 210 | 210 | 210 | 210 | 210 | 210 | 210 | 210 | 210 | 210 | 210 | 210 | 210 |
| | | | | C | 210 | 210 | 210 | 210 | 210 | 210 | 210 | 210 | 210 | 210 | 210 | 210 | 210 | 210 |
| | | | | D | 210 | 210 | 210 | 210 | 210 | 210 | 210 | 210 | 210 | 210 | 210 | 210 | 210 | 210 |
| **HIP ROOFS (SLOPE 6.2:12 – 12:12)** | | | | | | | | | | | | | | | | | | |
| PSL-5 | 8" | 2 nails | 69 | B | 190 | 182 | 176 | 171 | 166 | 161 | 157 | 210 | 210 | 210 | 210 | 206 | 200 | 195 |
| | | | | C | 155 | 151 | 148 | 145 | 140 | 137 | 135 | 192 | 187 | 183 | 179 | 174 | 170 | 167 |
| | | | | D | 141 | 138 | 135 | 133 | 130 | 127 | 125 | 175 | 171 | 168 | 165 | 161 | 157 | 155 |
| PSL-6 | 8" | 4 nails | 119 | B | 210 | 210 | 210 | 210 | 210 | 210 | 206 | 210 | 210 | 210 | 210 | 210 | 210 | 210 |
| | | | | C | 204 | 198 | 194 | 190 | 184 | 180 | 177 | 210 | 210 | 210 | 210 | 210 | 210 | 210 |
| | | | | D | 185 | 181 | 178 | 175 | 170 | 167 | 164 | 210 | 210 | 210 | 210 | 210 | 207 | 204 |
| PSL-7 | 8" | 2 screws | 187 | B | 210 | 210 | 210 | 210 | 210 | 210 | 210 | 210 | 210 | 210 | 210 | 210 | 210 | 210 |
| | | | | C | 210 | 210 | 210 | 210 | 210 | 210 | 210 | 210 | 210 | 210 | 210 | 210 | 210 | 210 |
| | | | | D | 210 | 210 | 210 | 210 | 210 | 209 | 206 | 210 | 210 | 210 | 210 | 210 | 210 | 210 |
| PSL-8 | 8" | 4 screws | 226 | B | 210 | 210 | 210 | 210 | 210 | 210 | 210 | 210 | 210 | 210 | 210 | 210 | 210 | 210 |
| | | | | C | 210 | 210 | 210 | 210 | 210 | 210 | 210 | 210 | 210 | 210 | 210 | 210 | 210 | 210 |
| | | | | D | 210 | 210 | 210 | 210 | 210 | 210 | 210 | 210 | 210 | 210 | 210 | 210 | 210 | 210 |
| ROOF OVERHANG REDUCTION FACTOR[11] | | | | | 0.83 | | | | | | | N/A | | | | | | |

**See *Table C7. 1* on page 45 for assembly details, and *General Notes for APPENDIX C2* – APPENDIX C8 on page *13* for referenced superscript table notes.**

**Table C7. 6: Province Slate Maximum Wind Speeds of Gable Roof Cladding – 2026 FBC (HVHZ & Non-HVHZ); 2025 CBC; 2024 & 2021 IBC |5/8" PLYWOOD|**

| System No.[1] | Max Shingle Exposure | Shingle Fastener[4] | Allowable Pressure (psf) (ASD)[5,6] | Exposure Category[7] | ZONE 2/3 (CORNER/EDGE)[8] Maximum Wind Speed $V_{ult}$ (mph)[9,10,11] Building Height (ft)[12,13] | | | | | | | ZONE 1 (FIELD)[8] Maximum Wind Speed $V_{ult}$ (mph)[9,10,11] Building Height (ft)[12,13] | | | | | | |
|---|---|---|---|---|---|---|---|---|---|---|---|---|---|---|---|---|---|---|
| | | | | | 15 | 20 | 25 | 30 | 40 | 50 | 60 | 15 | 20 | 25 | 30 | 40 | 50 | 60 |
| **GABLE ROOFS (SLOPE 3:12 – 4.4:12)** | | | | | | | | | | | | | | | | | | |
| PSL-9 | 8" | 2 nails | 103 | B | 191 | 183 | 178 | 173 | 168 | 163 | 159 | 210 | 210 | 210 | 210 | 210 | 210 | 209 |
| | | | | C | 157 | 152 | 149 | 146 | 142 | 138 | 136 | 206 | 201 | 196 | 192 | 187 | 182 | 179 |
| | | | | D | 142 | 139 | 137 | 134 | 131 | 128 | 126 | 187 | 183 | 180 | 177 | 172 | 169 | 166 |
| PSL-10 | 8" | 4 nails | 214 | B | 210 | 210 | 210 | 210 | 210 | 210 | 210 | 210 | 210 | 210 | 210 | 210 | 210 | 210 |
| | | | | C | 210 | 210 | 210 | 210 | 204 | 199 | 196 | 210 | 210 | 210 | 210 | 210 | 210 | 210 |
| | | | | D | 205 | 200 | 197 | 193 | 189 | 185 | 182 | 210 | 210 | 210 | 210 | 210 | 210 | 210 |
| PSL-11 | 8" | 2 screws | 187 | B | 210 | 210 | 210 | 210 | 210 | 210 | 210 | 210 | 210 | 210 | 210 | 210 | 210 | 210 |
| | | | | C | 210 | 205 | 201 | 197 | 191 | 186 | 183 | 210 | 210 | 210 | 210 | 210 | 210 | 210 |
| | | | | D | 192 | 187 | 184 | 181 | 176 | 173 | 170 | 210 | 210 | 210 | 210 | 210 | 210 | 210 |
| PSL-12 | 8" | 4 screws | 226 | B | 210 | 210 | 210 | 210 | 210 | 210 | 210 | 210 | 210 | 210 | 210 | 210 | 210 | 210 |
| | | | | C | 210 | 210 | 210 | 210 | 210 | 205 | 201 | 210 | 210 | 210 | 210 | 210 | 210 | 210 |
| | | | | D | 210 | 206 | 202 | 199 | 194 | 190 | 187 | 210 | 210 | 210 | 210 | 210 | 210 | 210 |
| **GABLE ROOFS (SLOPE 4.5:12 – 6.1:12)** | | | | | | | | | | | | | | | | | | |
| PSL-9 | 8" | 2 nails | 103 | B | 209 | 200 | 194 | 188 | 183 | 177 | 173 | 210 | 210 | 210 | 210 | 210 | 210 | 210 |
| | | | | C | 171 | 166 | 162 | 159 | 154 | 151 | 148 | 210 | 210 | 210 | 210 | 210 | 208 | 204 |
| | | | | D | 155 | 152 | 149 | 146 | 143 | 140 | 138 | 210 | 209 | 205 | 201 | 196 | 192 | 189 |
| PSL-10 | 8" | 4 nails | 214 | B | 210 | 210 | 210 | 210 | 210 | 210 | 210 | 210 | 210 | 210 | 210 | 210 | 210 | 210 |
| | | | | C | 210 | 210 | 210 | 210 | 210 | 210 | 210 | 210 | 210 | 210 | 210 | 210 | 210 | 210 |
| | | | | D | 210 | 210 | 210 | 210 | 206 | 201 | 198 | 210 | 210 | 210 | 210 | 210 | 210 | 210 |
| PSL-11 | 8" | 2 screws | 187 | B | 210 | 210 | 210 | 210 | 210 | 210 | 210 | 210 | 210 | 210 | 210 | 210 | 210 | 210 |
| | | | | C | 210 | 210 | 210 | 210 | 208 | 203 | 200 | 210 | 210 | 210 | 210 | 210 | 210 | 210 |
| | | | | D | 209 | 204 | 201 | 197 | 192 | 188 | 185 | 210 | 210 | 210 | 210 | 210 | 210 | 210 |
| PSL-12 | 8" | 4 screws | 226 | B | 210 | 210 | 210 | 210 | 210 | 210 | 210 | 210 | 210 | 210 | 210 | 210 | 210 | 210 |
| | | | | C | 210 | 210 | 210 | 210 | 210 | 210 | 210 | 210 | 210 | 210 | 210 | 210 | 210 | 210 |
| | | | | D | 210 | 210 | 210 | 210 | 210 | 207 | 204 | 210 | 210 | 210 | 210 | 210 | 210 | 210 |
| **GABLE ROOFS (SLOPE 6.2:12 – 12:12)** | | | | | | | | | | | | | | | | | | |
| PSL-9 | 8" | 2 nails | 103 | B | 210 | 210 | 210 | 205 | 199 | 193 | 188 | 210 | 210 | 210 | 210 | 210 | 210 | 210 |
| | | | | C | 186 | 181 | 177 | 173 | 168 | 164 | 161 | 210 | 210 | 206 | 202 | 196 | 191 | 188 |
| | | | | D | 169 | 165 | 162 | 159 | 155 | 152 | 150 | 197 | 192 | 189 | 185 | 181 | 177 | 174 |
| PSL-10 | 8" | 4 nails | 214 | B | 210 | 210 | 210 | 210 | 210 | 210 | 210 | 210 | 210 | 210 | 210 | 210 | 210 | 210 |
| | | | | C | 210 | 210 | 210 | 210 | 210 | 210 | 210 | 210 | 210 | 210 | 210 | 210 | 210 | 210 |
| | | | | D | 210 | 210 | 210 | 210 | 210 | 210 | 210 | 210 | 210 | 210 | 210 | 210 | 210 | 210 |
| PSL-11 | 8" | 2 screws | 187 | B | 210 | 210 | 210 | 210 | 210 | 210 | 210 | 210 | 210 | 210 | 210 | 210 | 210 | 210 |
| | | | | C | 210 | 210 | 210 | 210 | 210 | 210 | 210 | 210 | 210 | 210 | 210 | 210 | 210 | 210 |
| | | | | D | 210 | 210 | 210 | 210 | 209 | 205 | 202 | 210 | 210 | 210 | 210 | 210 | 210 | 210 |
| PSL-12 | 8" | 4 screws | 226 | B | 210 | 210 | 210 | 210 | 210 | 210 | 210 | 210 | 210 | 210 | 210 | 210 | 210 | 210 |
| | | | | C | 210 | 210 | 210 | 210 | 210 | 210 | 210 | 210 | 210 | 210 | 210 | 210 | 210 | 210 |
| | | | | D | 210 | 210 | 210 | 210 | 210 | 210 | 210 | 210 | 210 | 210 | 210 | 210 | 210 | 210 |
| ROOF OVERHANG REDUCTION FACTOR[11] | | | | | 0.85 | | | | | | | 0.79 | | | | | | |

**See *Table C7. 1* on page 45 for assembly details, and *General Notes for APPENDIX C2* – APPENDIX C8 on page *13* for referenced superscript table notes.**


www.bocaengineering.com BOCA ENGINEERING CO. info@bocaengineering.com
Greater Victoria Area: (250) 477-7777 203-1001 Cloverdale Ave., Victoria BC V8X 4C9
Metro Vancouver: (604) 385-5210 1567 Brearley St., White Rock BC V4B 3M6

**Table C7. 7: Province Slate Maximum Wind Speeds of Hip Roof Cladding – 2026 FBC (HVHZ & Non-HVHZ); 2025 CBC; 2024 & 2021 IBC |5/8" PLYWOOD|**

| System No.[1] | Max Shingle Exposure | Shingle Fastener[4] | Allowable Pressure (psf) (ASD)[5,6] | Exposure Category[7] | ZONE 2/3 (CORNER/EDGE)[8] Maximum Wind Speed $V_{ult}$ (mph)[9,10,11] Building Height (ft)[12,13] | | | | | | | ZONE 1 (FIELD)[8] Maximum Wind Speed $V_{ult}$ (mph)[9,10,11] Building Height (ft)[12,13] | | | | | | |
|---|---|---|---|---|---|---|---|---|---|---|---|---|---|---|---|---|---|---|
| | | | | | 15 | 20 | 25 | 30 | 40 | 50 | 60 | 15 | 20 | 25 | 30 | 40 | 50 | 60 |
| **HIP ROOFS (SLOPE 3:12 – 4.4:12)** | | | | | | | | | | | | | | | | | | |
| PSL-9 | 8" | 2 nails | 103 | B | 210 | 210 | 207 | 201 | 196 | 190 | 185 | 210 | 210 | 210 | 210 | 210 | 210 | 210 |
| | | | | C | 183 | 178 | 174 | 170 | 165 | 161 | 158 | 210 | 210 | 206 | 202 | 196 | 191 | 188 |
| | | | | D | 166 | 162 | 159 | 156 | 153 | 149 | 147 | 197 | 192 | 189 | 185 | 181 | 177 | 174 |
| PSL-10 | 8" | 4 nails | 214 | B | 210 | 210 | 210 | 210 | 210 | 210 | 210 | 210 | 210 | 210 | 210 | 210 | 210 | 210 |
| | | | | C | 210 | 210 | 210 | 210 | 210 | 210 | 210 | 210 | 210 | 210 | 210 | 210 | 210 | 210 |
| | | | | D | 210 | 210 | 210 | 210 | 210 | 210 | 210 | 210 | 210 | 210 | 210 | 210 | 210 | 210 |
| PSL-11 | 8" | 2 screws | 187 | B | 210 | 210 | 210 | 210 | 210 | 210 | 210 | 210 | 210 | 210 | 210 | 210 | 210 | 210 |
| | | | | C | 210 | 210 | 210 | 210 | 210 | 210 | 210 | 210 | 210 | 210 | 210 | 210 | 210 | 210 |
| | | | | D | 210 | 210 | 210 | 210 | 206 | 201 | 198 | 210 | 210 | 210 | 210 | 210 | 210 | 210 |
| PSL-12 | 8" | 4 screws | 226 | B | 210 | 210 | 210 | 210 | 210 | 210 | 210 | 210 | 210 | 210 | 210 | 210 | 210 | 210 |
| | | | | C | 210 | 210 | 210 | 210 | 210 | 210 | 210 | 210 | 210 | 210 | 210 | 210 | 210 | 210 |
| | | | | D | 210 | 210 | 210 | 210 | 210 | 210 | 210 | 210 | 210 | 210 | 210 | 210 | 210 | 210 |
| **HIP ROOFS (SLOPE 4.5:12 – 6.1:12)** | | | | | | | | | | | | | | | | | | |
| PSL-9 | 8" | 2 nails | 103 | B | 210 | 210 | 210 | 210 | 210 | 210 | 209 | 210 | 210 | 210 | 210 | 210 | 210 | 210 |
| | | | | C | 206 | 201 | 196 | 192 | 187 | 182 | 179 | 210 | 210 | 210 | 210 | 210 | 210 | 210 |
| | | | | D | 187 | 183 | 180 | 177 | 172 | 169 | 166 | 210 | 210 | 210 | 207 | 202 | 198 | 195 |
| PSL-10 | 8" | 4 nails | 214 | B | 210 | 210 | 210 | 210 | 210 | 210 | 210 | 210 | 210 | 210 | 210 | 210 | 210 | 210 |
| | | | | C | 210 | 210 | 210 | 210 | 210 | 210 | 210 | 210 | 210 | 210 | 210 | 210 | 210 | 210 |
| | | | | D | 210 | 210 | 210 | 210 | 210 | 210 | 210 | 210 | 210 | 210 | 210 | 210 | 210 | 210 |
| PSL-11 | 8" | 2 screws | 187 | B | 210 | 210 | 210 | 210 | 210 | 210 | 210 | 210 | 210 | 210 | 210 | 210 | 210 | 210 |
| | | | | C | 210 | 210 | 210 | 210 | 210 | 210 | 210 | 210 | 210 | 210 | 210 | 210 | 210 | 210 |
| | | | | D | 210 | 210 | 210 | 210 | 210 | 210 | 210 | 210 | 210 | 210 | 210 | 210 | 210 | 210 |
| PSL-12 | 8" | 4 screws | 226 | B | 210 | 210 | 210 | 210 | 210 | 210 | 210 | 210 | 210 | 210 | 210 | 210 | 210 | 210 |
| | | | | C | 210 | 210 | 210 | 210 | 210 | 210 | 210 | 210 | 210 | 210 | 210 | 210 | 210 | 210 |
| | | | | D | 210 | 210 | 210 | 210 | 210 | 210 | 210 | 210 | 210 | 210 | 210 | 210 | 210 | 210 |
| **HIP ROOFS (SLOPE 6.2:12 – 12:12)** | | | | | | | | | | | | | | | | | | |
| PSL-9 | 8" | 2 nails | 103 | B | 210 | 210 | 210 | 209 | 203 | 197 | 192 | 210 | 210 | 210 | 210 | 210 | 210 | 210 |
| | | | | C | 190 | 184 | 180 | 177 | 171 | 167 | 164 | 210 | 210 | 210 | 210 | 210 | 208 | 204 |
| | | | | D | 172 | 168 | 165 | 162 | 158 | 155 | 153 | 210 | 209 | 205 | 201 | 196 | 192 | 189 |
| PSL-10 | 8" | 4 nails | 214 | B | 210 | 210 | 210 | 210 | 210 | 210 | 210 | 210 | 210 | 210 | 210 | 210 | 210 | 210 |
| | | | | C | 210 | 210 | 210 | 210 | 210 | 210 | 210 | 210 | 210 | 210 | 210 | 210 | 210 | 210 |
| | | | | D | 210 | 210 | 210 | 210 | 210 | 210 | 210 | 210 | 210 | 210 | 210 | 210 | 210 | 210 |
| PSL-11 | 8" | 2 screws | 187 | B | 210 | 210 | 210 | 210 | 210 | 210 | 210 | 210 | 210 | 210 | 210 | 210 | 210 | 210 |
| | | | | C | 210 | 210 | 210 | 210 | 210 | 210 | 210 | 210 | 210 | 210 | 210 | 210 | 210 | 210 |
| | | | | D | 210 | 210 | 210 | 210 | 210 | 209 | 206 | 210 | 210 | 210 | 210 | 210 | 210 | 210 |
| PSL-12 | 8" | 4 screws | 226 | B | 210 | 210 | 210 | 210 | 210 | 210 | 210 | 210 | 210 | 210 | 210 | 210 | 210 | 210 |
| | | | | C | 210 | 210 | 210 | 210 | 210 | 210 | 210 | 210 | 210 | 210 | 210 | 210 | 210 | 210 |
| | | | | D | 210 | 210 | 210 | 210 | 210 | 210 | 210 | 210 | 210 | 210 | 210 | 210 | 210 | 210 |
| ROOF OVERHANG REDUCTION FACTOR[11] | | | | | 0.83 | | | | | | | N/A | | | | | | |

**See *Table C7. 1* on page 45 for assembly details, and *General Notes for APPENDIX C2* – APPENDIX C8 on page *13* for referenced superscript table notes.**


www.bocaengineering.com BOCA ENGINEERING CO. info@bocaengineering.com
Greater Victoria Area: (250) 477-7777 203-1001 Cloverdale Ave., Victoria BC V8X 4C9
Metro Vancouver: (604) 385-5210 1567 Brearley St., White Rock BC V4B 3M6

## APPENDIX C8: PROVINCE SHAKE (PSH) WIND PRESSURE & WIND SPEED TABLES

**Table C8. 1: Province Shake Assembly Configurations**

| System No.[1] | Min Sheathing[2,3] | Max Shingle Exposure | Shingle Fasteners[4] | Allowable Pressure[5,6] (psf)(ASD) |
|---|---|---|---|---|
| **PSH-1** | 7/16" OSB | 9" | 4 nails per shingle, 11ga 1.75-inch galvanized ring-shank roofing nails | 92 |
| **PSH-2** | 7/16" OSB | 9" | 2 screws per shingle, #10 2-inch wafer head screws | 134 |
| **PSH-3** | 7/16" OSB | 9" | 4 screws per shingle, #10 2-inch wafer head screws | 161 |
| **PSH-4** | 1/2" Plywood | 9" | 4 nails per shingle, 11ga 1.75-inch galvanized ring-shank roofing nails | 123 |
| **PSH-5** | 1/2" Plywood | 9" | 2 screws per shingle, #10 2-inch wafer head screws | 178 |
| **PSH-6** | 1/2" Plywood | 9" | 4 screws per shingle, #10 2-inch wafer head screws | 214 |
| **PSH-7** | 5/8" Plywood | 9" | 4 nails per shingle, 11ga 1.75-inch galvanized ring-shank roofing nails | 159 |
| **PSH-8** | 5/8" Plywood | 9" | 2 screws per shingle, #10 2-inch wafer head screws | 178 |
| **PSH-9** | 5/8" Plywood | 9" | 4 screws per shingle, #10 2-inch wafer head screws | 214 |

**See *General Notes for APPENDIX C2 – APPENDIX C8* on page *13* for referenced superscript table notes.**

In accordance with the 2026 Florida Building Code (FBC), minimum 19/32-inch (5/8") plywood or wood planks must be installed for new roof deck construction in HVHZ regions.

Unless noted otherwise, the published allowable pressure (ASD) values apply to HVHZ and Non-HVHZ applications, and include a safety factor of 2.

**<WIND SPEED TABLES BEGIN NEXT PAGE>**


www.bocaengineering.com BOCA ENGINEERING CO. info@bocaengineering.com
Greater Victoria Area: (250) 477-7777 203-1001 Cloverdale Ave., Victoria BC V8X 4C9
Metro Vancouver: (604) 385-5210 1567 Brearley St., White Rock BC V4B 3M6

**Table C8. 2: Province Shake Maximum Wind Speeds of Gable Roof Cladding – 2026 FBC (Non-HVHZ); 2025 CBC; 2024 & 2021 IBC |7/16" OSB|**

| System No.[1] | Max Shingle Exposure | Shingle Fastener[4] | Allowable Pressure (psf) (ASD)[5,6] | Exposure Category[7] | ZONE 2/3 (CORNER/EDGE)[8] Maximum Wind Speed $V_{ult}$ (mph)[9,10,11] Building Height (ft)[12,13] | | | | | | | ZONE 1 (FIELD)[8] Maximum Wind Speed $V_{ult}$ (mph)[9,10,11] Building Height (ft)[12,13] | | | | | | |
|---|---|---|---|---|---|---|---|---|---|---|---|---|---|---|---|---|---|---|
| | | | | | 15 | 20 | 25 | 30 | 40 | 50 | 60 | 15 | 20 | 25 | 30 | 40 | 50 | 60 |
| **GABLE ROOFS (SLOPE 3:12 – 4.4:12)** | | | | | | | | | | | | | | | | | | |
| PSH-1 | 9" | 4 nails | 92.0 | B | 181 | 173 | 168 | 163 | 159 | 154 | 150 | 210 | 210 | 210 | 210 | 209 | 202 | 197 |
| | | | | C | 148 | 144 | 141 | 138 | 134 | 131 | 128 | 195 | 190 | 185 | 182 | 176 | 172 | 169 |
| | | | | D | 135 | 131 | 129 | 127 | 124 | 121 | 119 | 177 | 173 | 170 | 167 | 163 | 160 | 157 |
| PSH-2 | 9" | 2 screws | 134.0 | B | 210 | 209 | 203 | 197 | 192 | 185 | 181 | 210 | 210 | 210 | 210 | 210 | 210 | 210 |
| | | | | C | 179 | 174 | 170 | 166 | 162 | 158 | 155 | 210 | 210 | 210 | 210 | 210 | 208 | 204 |
| | | | | D | 162 | 159 | 156 | 153 | 149 | 146 | 144 | 210 | 209 | 205 | 201 | 196 | 193 | 190 |
| PSH-3 | 9" | 4 screws | 161.0 | B | 210 | 210 | 210 | 210 | 210 | 203 | 198 | 210 | 210 | 210 | 210 | 210 | 210 | 210 |
| | | | | C | 196 | 190 | 186 | 182 | 177 | 173 | 170 | 210 | 210 | 210 | 210 | 210 | 210 | 210 |
| | | | | D | 178 | 174 | 171 | 168 | 164 | 160 | 158 | 210 | 210 | 210 | 210 | 210 | 210 | 208 |
| **GABLE ROOFS (SLOPE 4.5:12 – 6.1:12)** | | | | | | | | | | | | | | | | | | |
| PSH-1 | 9" | 4 nails | 92.0 | B | 197 | 189 | 183 | 178 | 173 | 167 | 163 | 210 | 210 | 210 | 210 | 210 | 210 | 210 |
| | | | | C | 161 | 157 | 154 | 150 | 146 | 143 | 140 | 210 | 210 | 210 | 207 | 201 | 196 | 193 |
| | | | | D | 147 | 143 | 141 | 138 | 135 | 132 | 130 | 202 | 197 | 194 | 190 | 185 | 182 | 179 |
| PSH-2 | 9" | 2 screws | 134.0 | B | 210 | 210 | 210 | 210 | 209 | 202 | 197 | 210 | 210 | 210 | 210 | 210 | 210 | 210 |
| | | | | C | 195 | 189 | 185 | 181 | 176 | 172 | 169 | 210 | 210 | 210 | 210 | 210 | 210 | 210 |
| | | | | D | 177 | 173 | 170 | 167 | 163 | 159 | 157 | 210 | 210 | 210 | 210 | 210 | 210 | 210 |
| PSH-3 | 9" | 4 screws | 161.0 | B | 210 | 210 | 210 | 210 | 210 | 210 | 210 | 210 | 210 | 210 | 210 | 210 | 210 | 210 |
| | | | | C | 210 | 208 | 203 | 199 | 193 | 189 | 185 | 210 | 210 | 210 | 210 | 210 | 210 | 210 |
| | | | | D | 194 | 189 | 186 | 183 | 178 | 175 | 172 | 210 | 210 | 210 | 210 | 210 | 210 | 210 |
| **GABLE ROOFS (SLOPE 6.2:12 – 12:12)** | | | | | | | | | | | | | | | | | | |
| PSH-1 | 9" | 4 nails | 92.0 | B | 210 | 206 | 200 | 194 | 188 | 182 | 178 | 210 | 210 | 210 | 210 | 210 | 210 | 207 |
| | | | | C | 176 | 171 | 167 | 164 | 159 | 155 | 153 | 205 | 199 | 195 | 191 | 185 | 181 | 177 |
| | | | | D | 160 | 156 | 153 | 151 | 147 | 144 | 142 | 186 | 182 | 178 | 175 | 171 | 167 | 165 |
| PSH-2 | 9" | 2 screws | 134.0 | B | 210 | 210 | 210 | 210 | 210 | 210 | 210 | 210 | 210 | 210 | 210 | 210 | 210 | 210 |
| | | | | C | 210 | 206 | 202 | 198 | 192 | 187 | 184 | 210 | 210 | 210 | 210 | 210 | 210 | 210 |
| | | | | D | 193 | 188 | 185 | 182 | 177 | 174 | 171 | 210 | 210 | 210 | 210 | 206 | 202 | 199 |
| PSH-3 | 9" | 4 screws | 161.0 | B | 210 | 210 | 210 | 210 | 210 | 210 | 210 | 210 | 210 | 210 | 210 | 210 | 210 | 210 |
| | | | | C | 210 | 210 | 210 | 210 | 210 | 205 | 202 | 210 | 210 | 210 | 210 | 210 | 210 | 210 |
| | | | | D | 210 | 206 | 203 | 199 | 194 | 190 | 187 | 210 | 210 | 210 | 210 | 210 | 210 | 210 |
| ROOF OVERHANG REDUCTION FACTOR[11] | | | | | 0.85 | | | | | | | 0.79 | | | | | | |

**See *Table C8. 1 on* page 52 for assembly details, and *General Notes for APPENDIX C2* – APPENDIX C8 on page *13* for referenced superscript table notes.**


www.bocaengineering.com BOCA ENGINEERING CO. info@bocaengineering.com
Greater Victoria Area: (250) 477-7777 203-1001 Cloverdale Ave., Victoria BC V8X 4C9
Metro Vancouver: (604) 385-5210 1567 Brearley St., White Rock BC V4B 3M6

**Table C8. 3: Province Slate Maximum Wind Speeds of Hip Roof Cladding – 2026 FBC (Non-HVHZ); 2025 CBC; 2024 & 2021 IBC |7/16" OSB|**

| System No.[1] | Max Shingle Exposure | Shingle Fastener[4] | Allowable Pressure (psf) (ASD)[5,6] | Exposure Category[7] | ZONE 2/3 (CORNER/EDGE)[8] Maximum Wind Speed $V_{ult}$ (mph)[9,10,11] Building Height (ft)[12,13] | | | | | | | ZONE 1 (FIELD)[8] Maximum Wind Speed $V_{ult}$ (mph)[9,10,11] Building Height (ft)[12,13] | | | | | | |
|---|---|---|---|---|---|---|---|---|---|---|---|---|---|---|---|---|---|---|
| | | | | | 15 | 20 | 25 | 30 | 40 | 50 | 60 | 15 | 20 | 25 | 30 | 40 | 50 | 60 |
| **HIP ROOFS (SLOPE 3:12 – 4.4:12)** | | | | | | | | | | | | | | | | | | |
| PSH-1 | 9" | 4 nails | 92.0 | B | 210 | 202 | 196 | 190 | 185 | 179 | 175 | 210 | 210 | 210 | 210 | 210 | 210 | 207 |
| | | | | C | 173 | 168 | 164 | 161 | 156 | 152 | 150 | 205 | 199 | 195 | 191 | 185 | 181 | 177 |
| | | | | D | 157 | 153 | 150 | 148 | 144 | 141 | 139 | 186 | 182 | 178 | 175 | 171 | 167 | 165 |
| PSH-2 | 9" | 2 screws | 134.0 | B | 210 | 210 | 210 | 210 | 210 | 210 | 210 | 210 | 210 | 210 | 210 | 210 | 210 | 210 |
| | | | | C | 208 | 203 | 198 | 194 | 188 | 184 | 181 | 210 | 210 | 210 | 210 | 210 | 210 | 210 |
| | | | | D | 189 | 185 | 182 | 178 | 174 | 170 | 168 | 210 | 210 | 210 | 210 | 206 | 202 | 199 |
| PSH-3 | 9" | 4 screws | 161.0 | B | 210 | 210 | 210 | 210 | 210 | 210 | 210 | 210 | 210 | 210 | 210 | 210 | 210 | 210 |
| | | | | C | 210 | 210 | 210 | 210 | 207 | 202 | 198 | 210 | 210 | 210 | 210 | 210 | 210 | 210 |
| | | | | D | 208 | 203 | 199 | 196 | 191 | 187 | 184 | 210 | 210 | 210 | 210 | 210 | 210 | 210 |
| **HIP ROOFS (SLOPE 4.5:12 – 6.1:12)** | | | | | | | | | | | | | | | | | | |
| PSH-1 | 9" | 4 nails | 92.0 | B | 210 | 210 | 210 | 210 | 209 | 202 | 197 | 210 | 210 | 210 | 210 | 210 | 210 | 210 |
| | | | | C | 195 | 190 | 185 | 182 | 176 | 172 | 169 | 210 | 210 | 210 | 210 | 207 | 202 | 199 |
| | | | | D | 177 | 173 | 170 | 167 | 163 | 160 | 157 | 208 | 203 | 200 | 196 | 191 | 187 | 185 |
| PSH-2 | 9" | 2 screws | 134.0 | B | 210 | 210 | 210 | 210 | 210 | 210 | 210 | 210 | 210 | 210 | 210 | 210 | 210 | 210 |
| | | | | C | 210 | 210 | 210 | 210 | 210 | 208 | 204 | 210 | 210 | 210 | 210 | 210 | 210 | 210 |
| | | | | D | 210 | 209 | 205 | 201 | 196 | 193 | 190 | 210 | 210 | 210 | 210 | 210 | 210 | 210 |
| PSH-4 | 9" | 4 screws | 161.0 | B | 210 | 210 | 210 | 210 | 210 | 210 | 210 | 210 | 210 | 210 | 210 | 210 | 210 | 210 |
| | | | | C | 210 | 210 | 210 | 210 | 210 | 210 | 210 | 210 | 210 | 210 | 210 | 210 | 210 | 210 |
| | | | | D | 210 | 210 | 210 | 210 | 210 | 210 | 208 | 210 | 210 | 210 | 210 | 210 | 210 | 210 |
| **HIP ROOFS (SLOPE 6.2:12 – 12:12)** | | | | | | | | | | | | | | | | | | |
| PSH-1 | 9" | 4 nails | 92.0 | B | 210 | 210 | 203 | 198 | 192 | 186 | 181 | 210 | 210 | 210 | 210 | 210 | 210 | 210 |
| | | | | C | 179 | 174 | 170 | 167 | 162 | 158 | 155 | 210 | 210 | 210 | 207 | 201 | 196 | 193 |
| | | | | D | 163 | 159 | 156 | 153 | 150 | 147 | 144 | 202 | 197 | 194 | 190 | 185 | 182 | 179 |
| PSH-2 | 9" | 2 screws | 134.0 | B | 210 | 210 | 210 | 210 | 210 | 210 | 210 | 210 | 210 | 210 | 210 | 210 | 210 | 210 |
| | | | | C | 210 | 210 | 206 | 201 | 196 | 191 | 188 | 210 | 210 | 210 | 210 | 210 | 210 | 210 |
| | | | | D | 197 | 192 | 188 | 185 | 181 | 177 | 174 | 210 | 210 | 210 | 210 | 210 | 210 | 210 |
| PSH-3 | 9" | 4 screws | 161.0 | B | 210 | 210 | 210 | 210 | 210 | 210 | 210 | 210 | 210 | 210 | 210 | 210 | 210 | 210 |
| | | | | C | 210 | 210 | 210 | 210 | 210 | 209 | 206 | 210 | 210 | 210 | 210 | 210 | 210 | 210 |
| | | | | D | 210 | 210 | 207 | 203 | 198 | 194 | 191 | 210 | 210 | 210 | 210 | 210 | 210 | 210 |
| ROOF OVERHANG REDUCTION FACTOR[11] | | | | | 0.83 | | | | | | | N/A | | | | | | |

**See Table C8.1 on page 52 for assembly details, and *General Notes for APPENDIX C2* – APPENDIX C8 on page *13* for referenced superscript table notes.**


www.bocaengineering.com BOCA ENGINEERING CO. info@bocaengineering.com
Greater Victoria Area: (250) 477-7777 203-1001 Cloverdale Ave., Victoria BC V8X 4C9
Metro Vancouver: (604) 385-5210 1567 Brearley St., White Rock BC V4B 3M6

**Table C8. 4: Province Shake Maximum Wind Speeds of Gable Roof Cladding – 2026 FBC (HVHZ & Non-HVHZ); 2025 CBC; 2024 & 2021 IBC |1/2" PLYWOOD|**

| System No.[1] | Max Shingle Exposure | Shingle Fastener[4] | Allowable Pressure (psf) (ASD)[5,6] | Exposure Category[7] | ZONE 2/3 (CORNER/EDGE)[8] Maximum Wind Speed $V_{ult}$ (mph)[9,10,11] Building Height (ft)[12,13] | | | | | | | ZONE 1 (FIELD)[8] Maximum Wind Speed $V_{ult}$ (mph)[9,10,11] Building Height (ft)[12,13] | | | | | | |
|---|---|---|---|---|---|---|---|---|---|---|---|---|---|---|---|---|---|---|
| | | | | | 15 | 20 | 25 | 30 | 40 | 50 | 60 | 15 | 20 | 25 | 30 | 40 | 50 | 60 |
| **GABLE ROOFS (SLOPE 3:12 – 4.4:12)** | | | | | | | | | | | | | | | | | | |
| PSH-4 | 9" | 4 nails | 123 | B | 209 | 200 | 194 | 189 | 184 | 178 | 173 | 210 | 210 | 210 | 210 | 210 | 210 | 210 |
| | | | | C | 171 | 166 | 163 | 159 | 155 | 151 | 149 | 210 | 210 | 210 | 210 | 204 | 199 | 196 |
| | | | | D | 156 | 152 | 149 | 147 | 143 | 140 | 138 | 205 | 200 | 196 | 193 | 188 | 184 | 182 |
| PSH-5 | 9" | 2 screws | 178 | B | 210 | 210 | 210 | 210 | 210 | 210 | 208 | 210 | 210 | 210 | 210 | 210 | 210 | 210 |
| | | | | C | 206 | 200 | 196 | 192 | 186 | 182 | 179 | 210 | 210 | 210 | 210 | 210 | 210 | 210 |
| | | | | D | 187 | 183 | 179 | 176 | 172 | 169 | 166 | 210 | 210 | 210 | 210 | 210 | 210 | 210 |
| PSH-6 | 9" | 4 screws | 214 | B | 210 | 210 | 210 | 210 | 210 | 210 | 210 | 210 | 210 | 210 | 210 | 210 | 210 | 210 |
| | | | | C | 210 | 210 | 210 | 210 | 204 | 199 | 196 | 210 | 210 | 210 | 210 | 210 | 210 | 210 |
| | | | | D | 205 | 200 | 197 | 193 | 189 | 185 | 182 | 210 | 210 | 210 | 210 | 210 | 210 | 210 |
| **GABLE ROOFS (SLOPE 4.5:12 – 6.1:12)** | | | | | | | | | | | | | | | | | | |
| PSH-4 | 9" | 4 nails | 123 | B | 210 | 210 | 210 | 206 | 200 | 194 | 189 | 210 | 210 | 210 | 210 | 210 | 210 | 210 |
| | | | | C | 187 | 181 | 178 | 174 | 169 | 165 | 162 | 210 | 210 | 210 | 210 | 210 | 210 | 210 |
| | | | | D | 170 | 166 | 163 | 160 | 156 | 153 | 150 | 210 | 210 | 210 | 210 | 210 | 210 | 207 |
| PSH-5 | 9" | 2 screws | 178 | B | 210 | 210 | 210 | 210 | 210 | 210 | 210 | 210 | 210 | 210 | 210 | 210 | 210 | 210 |
| | | | | C | 210 | 210 | 210 | 209 | 203 | 198 | 195 | 210 | 210 | 210 | 210 | 210 | 210 | 210 |
| | | | | D | 204 | 199 | 196 | 192 | 187 | 184 | 181 | 210 | 210 | 210 | 210 | 210 | 210 | 210 |
| PSH-6 | 9" | 4 screws | 214 | B | 210 | 210 | 210 | 210 | 210 | 210 | 210 | 210 | 210 | 210 | 210 | 210 | 210 | 210 |
| | | | | C | 210 | 210 | 210 | 210 | 210 | 210 | 210 | 210 | 210 | 210 | 210 | 210 | 210 | 210 |
| | | | | D | 210 | 210 | 210 | 210 | 206 | 201 | 198 | 210 | 210 | 210 | 210 | 210 | 210 | 210 |
| **GABLE ROOFS (SLOPE 6.2:12 – 12:12)** | | | | | | | | | | | | | | | | | | |
| PSH-4 | 9" | 4 nails | 123 | B | 210 | 210 | 210 | 210 | 210 | 210 | 206 | 210 | 210 | 210 | 210 | 210 | 210 | 210 |
| | | | | C | 203 | 198 | 193 | 189 | 184 | 180 | 176 | 210 | 210 | 210 | 210 | 210 | 209 | 205 |
| | | | | D | 185 | 180 | 177 | 174 | 170 | 166 | 164 | 210 | 210 | 206 | 203 | 197 | 194 | 191 |
| PSH-5 | 9" | 2 screws | 178 | B | 210 | 210 | 210 | 210 | 210 | 210 | 210 | 210 | 210 | 210 | 210 | 210 | 210 | 210 |
| | | | | C | 210 | 210 | 210 | 210 | 210 | 210 | 210 | 210 | 210 | 210 | 210 | 210 | 210 | 210 |
| | | | | D | 210 | 210 | 210 | 209 | 204 | 200 | 197 | 210 | 210 | 210 | 210 | 210 | 210 | 210 |
| PSH-6 | 9" | 4 screws | 214 | B | 210 | 210 | 210 | 210 | 210 | 210 | 210 | 210 | 210 | 210 | 210 | 210 | 210 | 210 |
| | | | | C | 210 | 210 | 210 | 210 | 210 | 210 | 210 | 210 | 210 | 210 | 210 | 210 | 210 | 210 |
| | | | | D | 210 | 210 | 210 | 210 | 210 | 210 | 210 | 210 | 210 | 210 | 210 | 210 | 210 | 210 |
| ROOF OVERHANG REDUCTION FACTOR[11] | | | | | 0.85 | | | | | | | 0.79 | | | | | | |

**See Table C8.1 on page 52 for assembly details, and *General Notes for APPENDIX C2* – APPENDIX C8 on page *13* for referenced superscript table notes.**


www.bocaengineering.com BOCA ENGINEERING CO. info@bocaengineering.com
Greater Victoria Area: (250) 477-7777 203-1001 Cloverdale Ave., Victoria BC V8X 4C9
Metro Vancouver: (604) 385-5210 1567 Brearley St., White Rock BC V4B 3M6

**Table C8. 5: Province Slate Maximum Wind Speeds of Hip Roof Cladding – 2026 FBC (HVHZ & Non-HVHZ); 2025 CBC; 2024 & 2021 IBC |1/2" PLYWOOD|**

| System No.[1] | Max Shingle Exposure | Shingle Fastener[4] | Allowable Pressure (psf) (ASD)[5,6] | Exposure Category[7] | ZONE 2/3 (CORNER/EDGE)[8] Maximum Wind Speed $V_{ult}$ (mph)[9,10,11] Building Height (ft)[12,13] | | | | | | | ZONE 1 (FIELD)[8] Maximum Wind Speed $V_{ult}$ (mph)[9,10,11] Building Height (ft)[12,13] | | | | | | |
|---|---|---|---|---|---|---|---|---|---|---|---|---|---|---|---|---|---|---|
| | | | | | 15 | 20 | 25 | 30 | 40 | 50 | 60 | 15 | 20 | 25 | 30 | 40 | 50 | 60 |
| **HIP ROOFS (SLOPE 3:12 – 4.4:12)** | | | | | | | | | | | | | | | | | | |
| PSH-4 | 9" | 4 nails | 123 | B | 210 | 210 | 210 | 210 | 210 | 207 | 202 | 210 | 210 | 210 | 210 | 210 | 210 | 210 |
| | | | | C | 200 | 194 | 190 | 186 | 181 | 176 | 173 | 210 | 210 | 210 | 210 | 210 | 209 | 205 |
| | | | | D | 181 | 177 | 174 | 171 | 167 | 163 | 161 | 210 | 210 | 206 | 203 | 197 | 194 | 191 |
| PSH-5 | 9" | 2 screws | 178 | B | 210 | 210 | 210 | 210 | 210 | 210 | 210 | 210 | 210 | 210 | 210 | 210 | 210 | 210 |
| | | | | C | 210 | 210 | 210 | 210 | 210 | 210 | 208 | 210 | 210 | 210 | 210 | 210 | 210 | 210 |
| | | | | D | 210 | 210 | 209 | 206 | 200 | 197 | 193 | 210 | 210 | 210 | 210 | 210 | 210 | 210 |
| PSH-6 | 9" | 4 screws | 214 | B | 210 | 210 | 210 | 210 | 210 | 210 | 210 | 210 | 210 | 210 | 210 | 210 | 210 | 210 |
| | | | | C | 210 | 210 | 210 | 210 | 210 | 210 | 210 | 210 | 210 | 210 | 210 | 210 | 210 | 210 |
| | | | | D | 210 | 210 | 210 | 210 | 210 | 210 | 210 | 210 | 210 | 210 | 210 | 210 | 210 | 210 |
| **HIP ROOFS (SLOPE 4.5:12 – 6.1:12)** | | | | | | | | | | | | | | | | | | |
| PSH-4 | 9" | 4 nails | 123 | B | 210 | 210 | 210 | 210 | 210 | 210 | 210 | 210 | 210 | 210 | 210 | 210 | 210 | 210 |
| | | | | C | 210 | 210 | 210 | 210 | 204 | 199 | 196 | 210 | 210 | 210 | 210 | 210 | 210 | 210 |
| | | | | D | 205 | 200 | 196 | 193 | 188 | 184 | 182 | 210 | 210 | 210 | 210 | 210 | 210 | 210 |
| PSH-5 | 9" | 2 screws | 178 | B | 210 | 210 | 210 | 210 | 210 | 210 | 210 | 210 | 210 | 210 | 210 | 210 | 210 | 210 |
| | | | | C | 210 | 210 | 210 | 210 | 210 | 210 | 210 | 210 | 210 | 210 | 210 | 210 | 210 | 210 |
| | | | | D | 210 | 210 | 210 | 210 | 210 | 210 | 210 | 210 | 210 | 210 | 210 | 210 | 210 | 210 |
| PSH-6 | 9" | 4 screws | 214 | B | 210 | 210 | 210 | 210 | 210 | 210 | 210 | 210 | 210 | 210 | 210 | 210 | 210 | 210 |
| | | | | C | 210 | 210 | 210 | 210 | 210 | 210 | 210 | 210 | 210 | 210 | 210 | 210 | 210 | 210 |
| | | | | D | 210 | 210 | 210 | 210 | 210 | 210 | 210 | 210 | 210 | 210 | 210 | 210 | 210 | 210 |
| **HIP ROOFS (SLOPE 6.2:12 – 12:12)** | | | | | | | | | | | | | | | | | | |
| PSH-4 | 9" | 4 nails | 123 | B | 210 | 210 | 210 | 210 | 210 | 210 | 210 | 210 | 210 | 210 | 210 | 210 | 210 | 210 |
| | | | | C | 207 | 201 | 197 | 193 | 187 | 183 | 180 | 210 | 210 | 210 | 210 | 210 | 210 | 210 |
| | | | | D | 188 | 184 | 181 | 177 | 173 | 170 | 167 | 210 | 210 | 210 | 210 | 210 | 210 | 207 |
| PSH-5 | 9" | 2 screws | 178 | B | 210 | 210 | 210 | 210 | 210 | 210 | 210 | 210 | 210 | 210 | 210 | 210 | 210 | 210 |
| | | | | C | 210 | 210 | 210 | 210 | 210 | 210 | 210 | 210 | 210 | 210 | 210 | 210 | 210 | 210 |
| | | | | D | 210 | 210 | 210 | 210 | 208 | 204 | 201 | 210 | 210 | 210 | 210 | 210 | 210 | 210 |
| PSH-6 | 9" | 4 screws | 214 | B | 210 | 210 | 210 | 210 | 210 | 210 | 210 | 210 | 210 | 210 | 210 | 210 | 210 | 210 |
| | | | | C | 210 | 210 | 210 | 210 | 210 | 210 | 210 | 210 | 210 | 210 | 210 | 210 | 210 | 210 |
| | | | | D | 210 | 210 | 210 | 210 | 210 | 210 | 210 | 210 | 210 | 210 | 210 | 210 | 210 | 210 |
| ROOF OVERHANG REDUCTION FACTOR[11] | | | | | 0.83 | | | | | | | N/A | | | | | | |

**See Table C8.1 on page 52 for assembly details, and *General Notes for APPENDIX C2* – APPENDIX C8 on page *13* for referenced superscript table notes.**


www.bocaengineering.com BOCA ENGINEERING CO. info@bocaengineering.com
Greater Victoria Area: (250) 477-7777 203-1001 Cloverdale Ave., Victoria BC V8X 4C9
Metro Vancouver: (604) 385-5210 1567 Brearley St., White Rock BC V4B 3M6

**Table C8. 6: Province Shake Maximum Wind Speeds of Gable Roof Cladding – 2026 FBC (HVHZ & Non-HVHZ); 2025 CBC; 2024 & 2021 IBC |5/8" PLYWOOD|**

| System No.[1] | Max Shingle Exposure | Shingle Fastener[4] | Allowable Pressure (psf) (ASD)[5,6] | Exposure Category[7] | ZONE 2/3 (CORNER/EDGE)[8] Maximum Wind Speed $V_{ult}$ (mph)[9,10,11] Building Height (ft)[12,13] | | | | | | | ZONE 1 (FIELD)[8] Maximum Wind Speed $V_{ult}$ (mph)[9,10,11] Building Height (ft)[12,13] | | | | | | |
|---|---|---|---|---|---|---|---|---|---|---|---|---|---|---|---|---|---|---|
| | | | | | 15 | 20 | 25 | 30 | 40 | 50 | 60 | 15 | 20 | 25 | 30 | 40 | 50 | 60 |
| **GABLE ROOFS (SLOPE 3:12 – 4.4:12)** | | | | | | | | | | | | | | | | | | |
| PSH-7 | 9" | 4 nails | 159 | B | 210 | 210 | 210 | 210 | 209 | 202 | 197 | 210 | 210 | 210 | 210 | 210 | 210 | 210 |
| | | | | C | 195 | 189 | 185 | 181 | 176 | 172 | 169 | 210 | 210 | 210 | 210 | 210 | 210 | 210 |
| | | | | D | 177 | 173 | 170 | 167 | 163 | 159 | 157 | 210 | 210 | 210 | 210 | 210 | 210 | 207 |
| PSH-8 | 9" | 2 screws | 178 | B | 210 | 210 | 210 | 210 | 210 | 210 | 208 | 210 | 210 | 210 | 210 | 210 | 210 | 210 |
| | | | | C | 206 | 200 | 196 | 192 | 186 | 182 | 179 | 210 | 210 | 210 | 210 | 210 | 210 | 210 |
| | | | | D | 187 | 183 | 179 | 176 | 172 | 169 | 166 | 210 | 210 | 210 | 210 | 210 | 210 | 210 |
| PSH-9 | 9" | 4 screws | 214 | B | 210 | 210 | 210 | 210 | 210 | 210 | 210 | 210 | 210 | 210 | 210 | 210 | 210 | 210 |
| | | | | C | 210 | 210 | 210 | 210 | 204 | 199 | 196 | 210 | 210 | 210 | 210 | 210 | 210 | 210 |
| | | | | D | 205 | 200 | 197 | 193 | 189 | 185 | 182 | 210 | 210 | 210 | 210 | 210 | 210 | 210 |
| **GABLE ROOFS (SLOPE 4.5:12 – 6.1:12)** | | | | | | | | | | | | | | | | | | |
| PSH-7 | 9" | 4 nails | 159 | B | 210 | 210 | 210 | 210 | 210 | 210 | 210 | 210 | 210 | 210 | 210 | 210 | 210 | 210 |
| | | | | C | 210 | 206 | 202 | 198 | 192 | 187 | 184 | 210 | 210 | 210 | 210 | 210 | 210 | 210 |
| | | | | D | 193 | 188 | 185 | 182 | 177 | 174 | 171 | 210 | 210 | 210 | 210 | 210 | 210 | 210 |
| PSH-8 | 9" | 2 screws | 178 | B | 210 | 210 | 210 | 210 | 210 | 210 | 210 | 210 | 210 | 210 | 210 | 210 | 210 | 210 |
| | | | | C | 210 | 210 | 210 | 209 | 203 | 198 | 195 | 210 | 210 | 210 | 210 | 210 | 210 | 210 |
| | | | | D | 204 | 199 | 196 | 192 | 187 | 184 | 181 | 210 | 210 | 210 | 210 | 210 | 210 | 210 |
| PSH-9 | 9" | 4 screws | 214 | B | 210 | 210 | 210 | 210 | 210 | 210 | 210 | 210 | 210 | 210 | 210 | 210 | 210 | 210 |
| | | | | C | 210 | 210 | 210 | 210 | 210 | 210 | 210 | 210 | 210 | 210 | 210 | 210 | 210 | 210 |
| | | | | D | 210 | 210 | 210 | 210 | 206 | 201 | 198 | 210 | 210 | 210 | 210 | 210 | 210 | 210 |
| **GABLE ROOFS (SLOPE 6.2:12 – 12:12)** | | | | | | | | | | | | | | | | | | |
| PSH-7 | 9" | 4 nails | 159 | B | 210 | 210 | 210 | 210 | 210 | 210 | 210 | 210 | 210 | 210 | 210 | 210 | 210 | 210 |
| | | | | C | 210 | 210 | 210 | 210 | 209 | 204 | 201 | 210 | 210 | 210 | 210 | 210 | 210 | 210 |
| | | | | D | 210 | 205 | 201 | 198 | 193 | 189 | 186 | 210 | 210 | 210 | 210 | 210 | 210 | 210 |
| PSH-8 | 9" | 2 screws | 178 | B | 210 | 210 | 210 | 210 | 210 | 210 | 210 | 210 | 210 | 210 | 210 | 210 | 210 | 210 |
| | | | | C | 210 | 210 | 210 | 210 | 210 | 210 | 210 | 210 | 210 | 210 | 210 | 210 | 210 | 210 |
| | | | | D | 210 | 210 | 210 | 209 | 204 | 200 | 197 | 210 | 210 | 210 | 210 | 210 | 210 | 210 |
| PSH-9 | 9" | 4 screws | 214 | B | 210 | 210 | 210 | 210 | 210 | 210 | 210 | 210 | 210 | 210 | 210 | 210 | 210 | 210 |
| | | | | C | 210 | 210 | 210 | 210 | 210 | 210 | 210 | 210 | 210 | 210 | 210 | 210 | 210 | 210 |
| | | | | D | 210 | 210 | 210 | 210 | 210 | 210 | 210 | 210 | 210 | 210 | 210 | 210 | 210 | 210 |
| ROOF OVERHANG REDUCTION FACTOR[11] | | | | | 0.85 | | | | | | | 0.79 | | | | | | |

**See Table C8.1 on page 52 for assembly details, and *General Notes for APPENDIX C2* – APPENDIX C8 on page *13* for referenced superscript table notes.**


www.bocaengineering.com BOCA ENGINEERING CO. info@bocaengineering.com
Greater Victoria Area: (250) 477-7777 203-1001 Cloverdale Ave., Victoria BC V8X 4C9
Metro Vancouver: (604) 385-5210 1567 Brearley St., White Rock BC V4B 3M6

**Table C8. 7: Province Slate Maximum Wind Speeds of Hip Roof Cladding – 2026 FBC (HVHZ & Non-HVHZ); 2025 CBC; 2024 & 2021 IBC |5/8" PLYWOOD|**

| System No.[1] | Max Shingle Exposure | Shingle Fastener[4] | Allowable Pressure (psf) (ASD)[5,6] | Exposure Category[7] | ZONE 2/3 (CORNER/EDGE)[8] Maximum Wind Speed $V_{ult}$ (mph)[9,10,11] Building Height (ft)[12,13] | | | | | | | ZONE 1 (FIELD)[8] Maximum Wind Speed $V_{ult}$ (mph)[9,10,11] Building Height (ft)[12,13] | | | | | | |
|---|---|---|---|---|---|---|---|---|---|---|---|---|---|---|---|---|---|---|
| | | | | | 15 | 20 | 25 | 30 | 40 | 50 | 60 | 15 | 20 | 25 | 30 | 40 | 50 | 60 |
| **HIP ROOFS (SLOPE 3:12 – 4.4:12)** | | | | | | | | | | | | | | | | | | |
| PSH-7 | 9" | 4 nails | 159 | B | 210 | 210 | 210 | 210 | 210 | 210 | 210 | 210 | 210 | 210 | 210 | 210 | 210 | 210 |
| | | | | C | 210 | 210 | 210 | 210 | 205 | 200 | 197 | 210 | 210 | 210 | 210 | 210 | 210 | 210 |
| | | | | D | 206 | 201 | 198 | 194 | 189 | 186 | 183 | 210 | 210 | 210 | 210 | 210 | 210 | 210 |
| PSH-8 | 9" | 2 screws | 178 | B | 210 | 210 | 210 | 210 | 210 | 210 | 210 | 210 | 210 | 210 | 210 | 210 | 210 | 210 |
| | | | | C | 210 | 210 | 210 | 210 | 210 | 210 | 208 | 210 | 210 | 210 | 210 | 210 | 210 | 210 |
| | | | | D | 210 | 210 | 209 | 206 | 200 | 197 | 193 | 210 | 210 | 210 | 210 | 210 | 210 | 210 |
| PSH-9 | 9" | 4 screws | 214 | B | 210 | 210 | 210 | 210 | 210 | 210 | 210 | 210 | 210 | 210 | 210 | 210 | 210 | 210 |
| | | | | C | 210 | 210 | 210 | 210 | 210 | 210 | 210 | 210 | 210 | 210 | 210 | 210 | 210 | 210 |
| | | | | D | 210 | 210 | 210 | 210 | 210 | 210 | 210 | 210 | 210 | 210 | 210 | 210 | 210 | 210 |
| **HIP ROOFS (SLOPE 4.5:12 – 6.1:12)** | | | | | | | | | | | | | | | | | | |
| PSH-7 | 9" | 4 nails | 159 | B | 210 | 210 | 210 | 210 | 210 | 210 | 210 | 210 | 210 | 210 | 210 | 210 | 210 | 210 |
| | | | | C | 210 | 210 | 210 | 210 | 210 | 210 | 210 | 210 | 210 | 210 | 210 | 210 | 210 | 210 |
| | | | | D | 210 | 210 | 210 | 210 | 210 | 210 | 207 | 210 | 210 | 210 | 210 | 210 | 210 | 210 |
| PSH-8 | 9" | 2 screws | 178 | B | 210 | 210 | 210 | 210 | 210 | 210 | 210 | 210 | 210 | 210 | 210 | 210 | 210 | 210 |
| | | | | C | 210 | 210 | 210 | 210 | 210 | 210 | 210 | 210 | 210 | 210 | 210 | 210 | 210 | 210 |
| | | | | D | 210 | 210 | 210 | 210 | 210 | 210 | 210 | 210 | 210 | 210 | 210 | 210 | 210 | 210 |
| PSH-9 | 9" | 4 screws | 214 | B | 210 | 210 | 210 | 210 | 210 | 210 | 210 | 210 | 210 | 210 | 210 | 210 | 210 | 210 |
| | | | | C | 210 | 210 | 210 | 210 | 210 | 210 | 210 | 210 | 210 | 210 | 210 | 210 | 210 | 210 |
| | | | | D | 210 | 210 | 210 | 210 | 210 | 210 | 210 | 210 | 210 | 210 | 210 | 210 | 210 | 210 |
| **HIP ROOFS (SLOPE 6.2:12 – 12:12)** | | | | | | | | | | | | | | | | | | |
| PSH-7 | 9" | 4 nails | 159 | B | 210 | 210 | 210 | 210 | 210 | 210 | 210 | 210 | 210 | 210 | 210 | 210 | 210 | 210 |
| | | | | C | 210 | 210 | 210 | 210 | 210 | 208 | 204 | 210 | 210 | 210 | 210 | 210 | 210 | 210 |
| | | | | D | 210 | 209 | 205 | 202 | 197 | 193 | 190 | 210 | 210 | 210 | 210 | 210 | 210 | 210 |
| PSH-8 | 9" | 2 screws | 178 | B | 210 | 210 | 210 | 210 | 210 | 210 | 210 | 210 | 210 | 210 | 210 | 210 | 210 | 210 |
| | | | | C | 210 | 210 | 210 | 210 | 210 | 210 | 210 | 210 | 210 | 210 | 210 | 210 | 210 | 210 |
| | | | | D | 210 | 210 | 210 | 210 | 208 | 204 | 201 | 210 | 210 | 210 | 210 | 210 | 210 | 210 |
| PSH-9 | 9" | 4 screws | 214 | B | 210 | 210 | 210 | 210 | 210 | 210 | 210 | 210 | 210 | 210 | 210 | 210 | 210 | 210 |
| | | | | C | 210 | 210 | 210 | 210 | 210 | 210 | 210 | 210 | 210 | 210 | 210 | 210 | 210 | 210 |
| | | | | D | 210 | 210 | 210 | 210 | 210 | 210 | 210 | 210 | 210 | 210 | 210 | 210 | 210 | 210 |
| ROOF OVERHANG REDUCTION FACTOR[11] | | | | | 0.83 | | | | | | | N/A | | | | | | |

**See Table C8.1 on page 52 for assembly details, and *General Notes for APPENDIX C2* – APPENDIX C8 on page *13* for referenced superscript table notes.**


www.bocaengineering.com BOCA ENGINEERING CO. info@bocaengineering.com
Greater Victoria Area: (250) 477-7777 203-1001 Cloverdale Ave., Victoria BC V8X 4C9
Metro Vancouver: (604) 385-5210 1567 Brearley St., White Rock BC V4B 3M6

## APPENDIX D: FLORIDA TO INTERNATIONAL CODE CROSS-REFERENCES

**Table D1: 2026 FBC to 2024/2021 IBC Cross-referenced Sections**

| 2024 /2021 IBC Section[1] | 2026 FBC Section | Description | Referenced Standard or Code Section[2] | Year | FBC Comparison to IBC |
|---|---|---|---|---|---|
| 1504.4 | 1504.3 | Wind Resistance of Nonballasted Roofs | FBC Section 1609 | - | Article content same as IBC |
| 1504.4.1 | 1504.3.1 | Wind Uplift Resistance | UL 580 | 2006 | Article content same as IBC |
| 1505 | 1505 | Fire Classification | ASTM E108 | 2025 | Article content similar to IBC; referenced standard edition differs |
| 1507.8.8 | 1507.8.8 | Flashing | CSSB | 2015 | Section added in FBC, different content as IBC |
| N/A | 1515.1.3 | Performance Requirements (HVHZ) | TAS 301 | 1994 | Section added in FBC |
| N/A | 1516.1 | Fire Classification (HVHZ) | ASTM E108 | 2025 | Section added in FBC |
| N/A | 1523.1.1 | Testing (HVHZ) | TAS 110 | 2000 | Section added in FBC |
| N/A | 1523.6.5 | Discontinuous Roofing Systems, Wind-driven Rain (HVHZ) | TAS 100 | 2023 | Section added in FBC |
| N/A | 1523.6.5.2.4.1 | Wind Uplift Resistance (HVHZ) | TAS 125 | 2003 | Section added in FBC |
| 2606.4 | 2606.4 | Burning Rate | ASTM D635 | 2018 | Article content same as IBC |
| 2606.4 | 2606.4 | Self-Ignition Temperature | ASTM D1929 | 2020 | Article content same as IBC |
| 2606.4 | 2606.4 | Smoke Density Rating | ASTM D2843 | 2019 | Article content same as IBC, referenced standard edition differs |
| N/A | 2615.2 | Weathering (HVHZ) | ASTM G155 | 2021 | Section added in FBC |
| N/A | 2615.2 | Tensile Strength after Weathering (HVHZ) | ASTM D638 | 2003 | Section added in FBC |

**Table D2: 2026 FBC-R to 2024/2021 IRC Cross-referenced Sections**

| 2024 /2021 IRC Section[1] | 2026 FBC-R Section | Description | Referenced Standard or Code Section[2] | Year | FBC-R Comparison to IRC |
|---|---|---|---|---|---|
| R902.1 | R902.1 | Fire Classification | ASTM E108 | 2025 | Article content similar to IRC; referenced standard edition differs |
| R904.3 | R904.3 | Material Specifications and Physical Characteristics | - | - | Article content similar to IRC |
| R905.1 | R905.1 | Roof Covering Application | FBC-R Table R301.2(2), R301.2(3) | - | Article content same as IRC |
| N/A | R4402.1 | Roof Assemblies and Rooftop Structures (HVHZ) | FBC Ch 15 | - | Section added in FBC-R |
| N/A | R4412.1 | Plastics (HVHZ) | FBC Ch 26 | - | Section added in FBC-R |

1. IBC/IRC equivalent sections are listed in comparison to the corresponding state code. (N/A) indicates that the IBC/IRC has no equivalent section and has not been addressed in the IBC/IRC.
2. Only the applicable reference standards and code sections cited in the main body text and this appendix are listed. (-) indicates that the main body text or this appendix covers the full explanation of the objective.

| 2026 FBC Section | Description |
|---|---|

**1507.8.8** **Flashing and Drip Edge**

DaVinci Roof Coverings perform as intended when installed per the manufacturer's installation instructions. Flashing shall be installed per manufacturer's installation instructions and comply with Cedar Shake and Shingle Bureau New Roof Construction Manual. Drip edge shall be installed over the underlayment on steep slope roofs with minimum overlap and extension distances.

**1515.1.3** **Performance Requirements (HVHZ)**

| 2026 FBC Section | Description |
|---|---|
| | Testing labs as listed in *9.0 REFERENCE TESTING AND EVALUATION DOCUMENTS* of this report are considered to comply with TAS 301 via accreditation by nationally recognized agencies. |
| **1516.1** | **Fire Classification (HVHZ)**<br>All roofing assemblies in HVHZ applications require classification to ASTM E108 Class A, B, or C, depending on building occupancy class. Information on DaVinci roofing classified assemblies is in Section *5.0 FIRE CLASSIFICATION* of this report. |
| **1523.1.1** | **Testing (HVHZ)**<br>DaVinci Roofing systems covered in this report for HVHZ applications have been tested in compliance with TAS 110. |
| **1523.6.5** | **Discontinuous Roofing Systems, Wind Driven Rain (HVHZ)**<br>DaVinci Roofing systems covered in this report for HVHZ applications have been tested in compliance with TAS 100 for wind-driven water infiltration resistance. |
| **1523.6.5.2.4.1** | **Wind Uplift Resistance (HVHZ)**<br>DaVinci Roofing systems covered in this report for HVHZ applications have been tested in accordance with TAS 125 to determine the allowable wind uplift pressure, applying a 2:1 margin of safety to tested results per Section 1523.4. See wind pressure and wind speed tables in *APPENDICES* C1 – C8 of this report. |
| **2615.2** | **Weathering (HVHZ)**<br>DaVinci Roofing products covered in this report have been tested to 4500 hours of accelerated xenon arc weathering exposure to ASTM G155, and have demonstrated physical integrity over the course of accelerated weathering. |
| **2615.2** | **Tensile Strength after Weathering (HVHZ)**<br>After 4500 hours of accelerated weathering exposure, DaVinci Roofing materials tested to ASTM D638 loss of tensile strength yield does not exceed 10%. |

| 2026 FBC-R Section | Description |
|---|---|
| **R4402.1** | **Roof Assemblies and Rooftop Structures (HVHZ)**<br>DaVinci Roofing systems as covered in this report comply with HVHZ applications as prescribed in FBC Chapter 15. |
| **R4412.1** | **Plastics (HVHZ)**<br>DaVinci Roofing systems as covered in this report comply with HVHZ applications as prescribed in FBC Chapter 26. |

**Additional Limitations: Florida Building Code (FBC) Only**

1. Fasteners shall conform to ASTM F1667 and ASME B18.6.1 per FBC Sections 1506.5 and 1506.6.
2. For installation in areas within 3,000 ft. of a saltwater coastline, fasteners used for DaVinci Roofing must comply with FBC Section 1711.

## APPENDIX E: CALIFORNIA TO INTERNATIONAL CODE CROSS-REFERENCES

**Table E1: 2025 CBC to 2024/2021 IBC Cross-referenced Sections**

| 2024 /2021 IBC Section[1] | 2025 CBC Section | Description | Referenced Standard or Code Section[1] | Year | CBC Comparison to IBC |
|---|---|---|---|---|---|
| 1504.4 | 1504.4 | Wind Resistance of Nonballasted Roofs | Section 1609.6.2 | - | Article content same as IBC |
| 1504.4.1 | 1504.4.1 | Wind Uplift Resistance | UL 580 | 2006 | Article content same as IBC |
| 1505 | 1505 | Fire Classification | ASTM E108 | 2020a | Article content same as IBC |
| 1507.8.8 | 1507.8.8 | Flashing | ASTM D1970 | 2021 | Article content same as IBC |
| 2606.4 | 2606.4 | Burning Rate | ASTM D635 | 2018 | Article content same as IBC |
| 2606.4 | 2606.4 | Self-Ignition Temperature | ASTM D1929 | 2020 | Article content same as IBC |
| 2606.4 | 2606.4 | Smoke Density | ASTM E2843 | 2022 | Article content same as IBC |

**Table E2: 2025 CRC to 2024/2021 IRC Cross-referenced Sections**

| 2024 /2021 IRC Section[1] | 2025 CRC Section | Description | Referenced Standard or Code Section[1] | Year | CRC Comparison to IRC |
|---|---|---|---|---|---|
| R902.1 | R902.1 | Fire Classification | ASTM E108 | 2020a | Article content same as IRC |
| R904.3 | R904.3 | Material Specifications and Physical Characteristics | - | - | Article content same as IRC |
| R905.1 | R905.1 | Roof Covering Application | CRC Table R301.2.1(1), R301.2.1(2) | - | Article content same as IRC |

1. Only the applicable reference standards and code sections cited in the main body text and this appendix are listed. (-) indicates that the main body text or this appendix covers the full explanation of the objective.


www.bocaengineering.com BOCA ENGINEERING CO. info@bocaengineering.com
Greater Victoria Area: (250) 477-7777 203-1001 Cloverdale Ave., Victoria BC V8X 4C9
Metro Vancouver: (604) 385-5210 1567 Brearley St., White Rock BC V4B 3M6

## APPENDIX F: GENERAL INSTALLATION DRAWINGS

Begins next page.

| DAVINCI ROOFING SLATE AND SHAKE DIMENSIONS | | | | |
|---|---|---|---|---|
| PRODUCT | LENGTHS (IN.) | WIDTH (IN.) | THICKNESS (IN.) | |
| | | | HEAD | TAIL |
| DAVINCI SLATE | 18 | 6, 7, 9, 10, 12 | 1/8 | 1/2 |
| DAVINCI SHAKE | 22 | 4, 6, 7, 8, 9 | 1/4 | 5/8 |
| SELECT SHAKE | 22 | 8, 10 | 1/4 | 5/8 |
| FANCY SHAKE | 18 | 5, 7, 12 | 1/4 | 1/2 |
| INSPIRE CLASSIC SLATE | 18 | 12 | 1/4 | 1/4 |
| PROVINCE SLATE | 11½ | 12 | ⅜ | ⅝ |
| PROVINCE SHAKE | 13½ | 12¾ | ⅜ | 1 |

NOTE: "BEAVER TAIL" AND "DIAMOND POINT" FANCY SHAKES ARE ONLY AVAILABLE IN 5" WIDTHS.

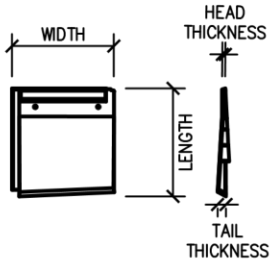


PSH 1 PROVINCE SHAKE
NOT-TO-SCALE

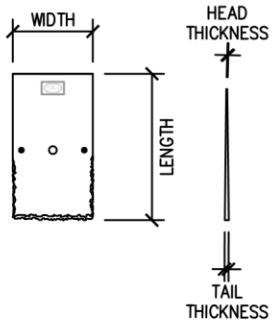


DVSL 1 DAVINCI SLATE
NOT-TO-SCALE

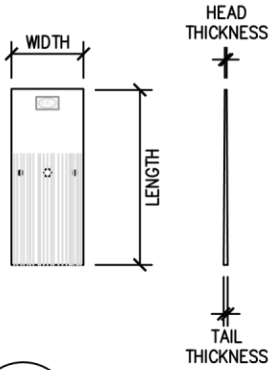


DVSH 1 DAVINCI SHAKE
NOT-TO-SCALE

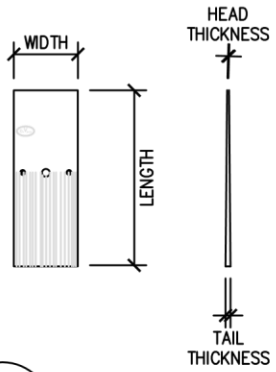


SSH 1 SELECT SHAKE
NOT-TO-SCALE

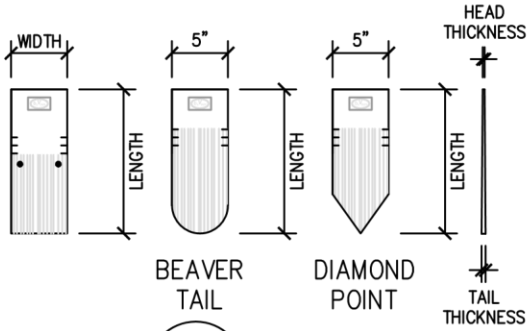


FSH 1 FANCY SHAKE
NOT-TO-SCALE

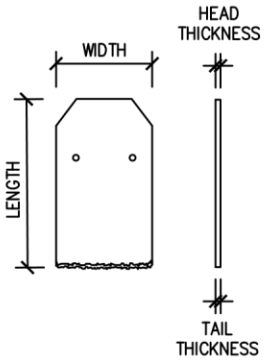


ICSL 1 INSPIRE CLASSIC SLATE
NOT-TO-SCALE

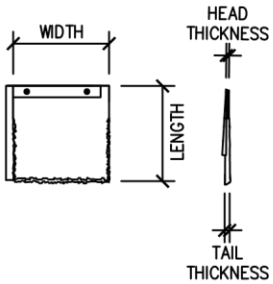


PSL 1 PROVINCE SLATE
NOT-TO-SCALE

COPYRIGHT © 2026 RESERVED. THESE PLANS AND DESIGNS ARE AT ALL TIMES THE PROPERTY OF BOCA ENGINEERING TO BE USED FOR THE PROJECT SHOWN. WRITTEN CONSENT IS REQUIRED FROM THE ENGINEER BEFORE ANY REPRODUCTION.

BOCA ENGINEERING
STRUCTURAL AND CIVIL ENGINEERS
#203-1001 CLOVERDALE AVE, VICTORIA BC V8X 4C9 250-477-7777
INFO@BOCAENGINEERING.COM
WWW.BOCAENGINEERING.COM

| DATE | | 7 | FOR PUBLICATION | | CB |
|---|---|---|---|---|---|
| SEPTEMBER 17, 2026 | | REV. | ISSUE | | APP |
| DRAWING NO. | SHEET NO. | SCALE | DES. | DRN. | CHK. |
| 0064-6136-SK2 | 1 OF 5 | NOT TO SCALE | CB | RQ | CB |

CLIENT: WESTLAKE DAVINCI ROOFSCAPES, LLC

PROJECT: DAVINCI SHAKE AND SLATE ROOFING

TITLE: DAVINCI ROOFING SLATE AND SHAKE PROFILES

1. DRAWING FOR ENGINEERING EVALUATION REPORT: 0064-15-7-6136

NOT FOR USE AS CONSTRUCTION DESIGN DOCUMENTS

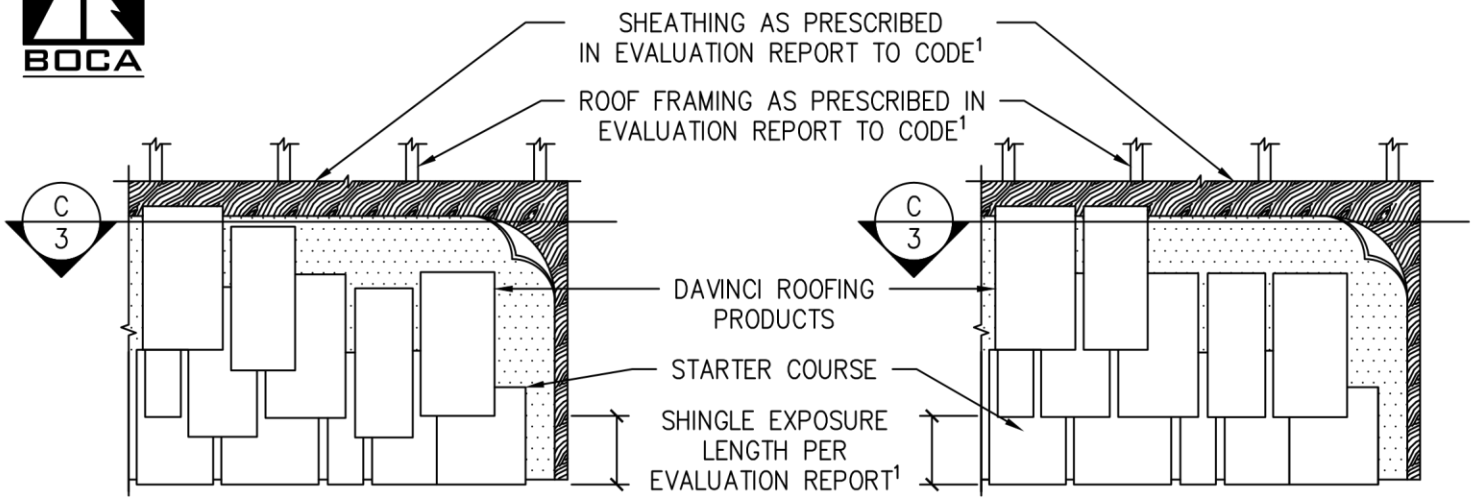


A 2 TYPICAL STAGGERED ROOFING INSTALLATION
PLAN VIEW | NOT-TO-SCALE

B 2 TYPICAL STRAIGHT ROOFING INSTALLATION
PLAN VIEW | NOT-TO-SCALE

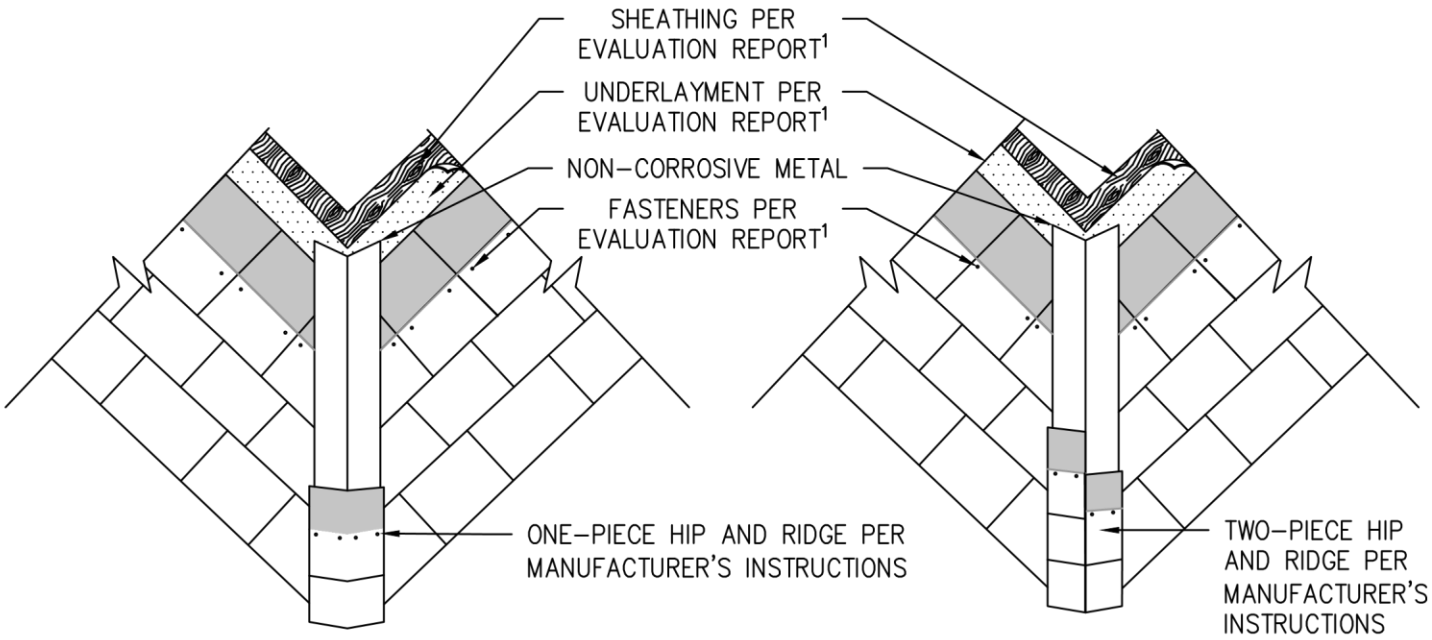


C 2 TYPICAL HIP/RIDGE ONE- PIECE DETAIL
PLAN VIEW | NOT-TO-SCALE

D 2 TYPICAL HIP/RIDGE TWO-PIECE DETAIL
PLAN VIEW | NOT-TO-SCALE

COPYRIGHT © 2026 RESERVED. THESE PLANS AND DESIGNS ARE AT ALL TIMES THE PROPERTY OF BOCA ENGINEERING TO BE USED FOR THE PROJECT SHOWN. WRITTEN CONSENT IS REQUIRED FROM THE ENGINEER BEFORE ANY REPRODUCTION.

BOCA ENGINEERING
STRUCTURAL AND CIVIL ENGINEERS
#203-1001 CLOVERDALE AVE, VICTORIA BC V8X 4C9 250-477-7777
INFO@BOCAENGINEERING.COM
WWW.BOCAENGINEERING.COM

| DATE | | 7 | FOR PUBLICATION | | CB |
|---|---|---|---|---|---|
| SEPTEMBER 17, 2026 | | REV. | ISSUE | | APP |
| DRAWING NO. | SHEET NO. | SCALE | DES. | DRN. | CHK. |
| 0064-6136-SK2 | 2 OF 5 | NOT TO SCALE | CB | RQ | CB |

CLIENT: WESTLAKE DAVINCI ROOFSCAPES, LLC

PROJECT: DAVINCI SHAKE AND SLATE ROOFING

TITLE: TYPICAL STAGGERED, STRAIGHT, HIP, AND RIDGE ROOFING PLAN

1. DRAWING FOR ENGINEERING EVALUATION REPORT: 0064-15-7-6136

NOT FOR USE AS CONSTRUCTION DESIGN DOCUMENTS

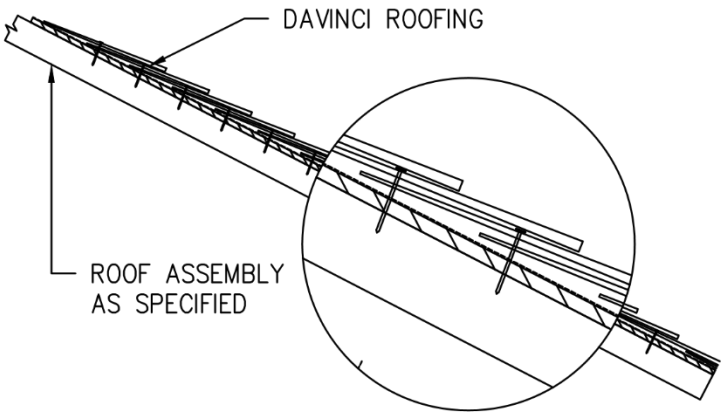


A/3 DAVINCI ROOFING TYPICAL INSTALLATION

SECTION VIEW | NOT-TO-SCALE

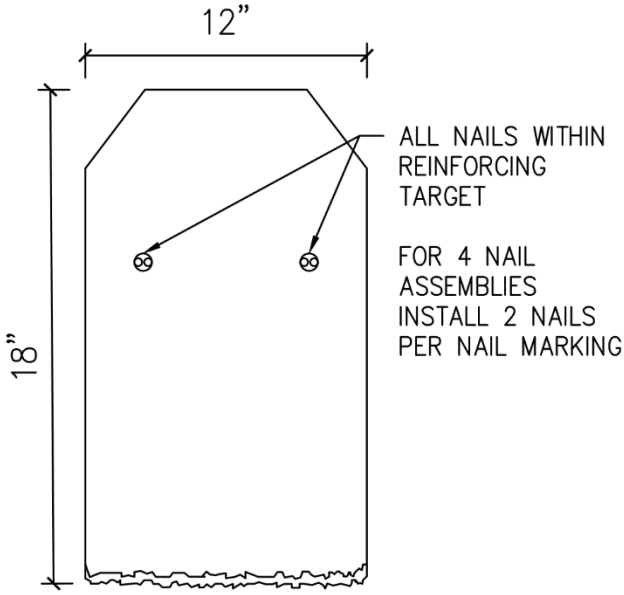


B/3 INSPIRE CLASSIC 4 NAIL INSTALLATION

SECTION VIEW | NOT-TO-SCALE

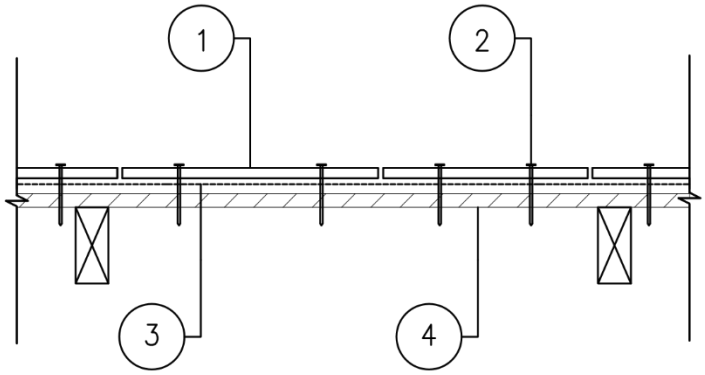


| ROOF FRAMING & WOOD-BASE SHEATHING ASSEMBLY EXTERIOR TO INTERIOR | |
|---|---|
| 1 | DAVINCI ROOFING |
| 2 | ROOFING FASTENERS PER EVALUATION REPORT DETAILS[1] |
| 3 | ROOFING UNDERLAYMENT PER EVALUATION REPORT, TO CODE[1] |
| 4 | SHEATHING PER EVALUATION REPORT, TO CODE[1] |

1. DRAWING FOR ENGINEERING EVALUATION REPORT: 0064-15

C/3 DAVINCI ROOFING ON WOOD SHEATHING

SECTION VIEW | NOT-TO-SCALE

COPYRIGHT © 2026 RESERVED. THESE PLANS AND DESIGNS ARE AT ALL TIMES THE PROPERTY OF BOCA ENGINEERING TO BE USED FOR THE PROJECT SHOWN. WRITTEN CONSENT IS REQUIRED FROM THE ENGINEER BEFORE ANY REPRODUCTION.

BOCA ENGINEERING
STRUCTURAL AND CIVIL ENGINEERS
#203-1001 CLOVERDALE AVE, VICTORIA BC
V8X 4C9 250-477-7777
INFO@BOCAENGINEERING.COM
WWW.BOCAENGINEERING.COM

| DATE | | 7 | FOR PUBLICATION | | CB |
|---|---|---|---|---|---|
| SEPTEMBER 17, 2026 | | REV. | ISSUE | | APP |
| DRAWING NO. | SHEET NO. | SCALE | DES. | DRN. | CHK. |
| 0064-6136-SK2 | 3 OF 5 | NOT TO SCALE | CB | RQ | CB |

CLIENT: WESTLAKE DAVINCI ROOFSCAPES, LLC

PROJECT: DAVINCI SHAKE AND SLATE ROOFING

TITLE: TYPICAL ROOFING SECTIONS

1. DRAWING FOR ENGINEERING EVALUATION REPORT: 0064-15-7-6136

NOT FOR USE AS CONSTRUCTION DESIGN DOCUMENTS

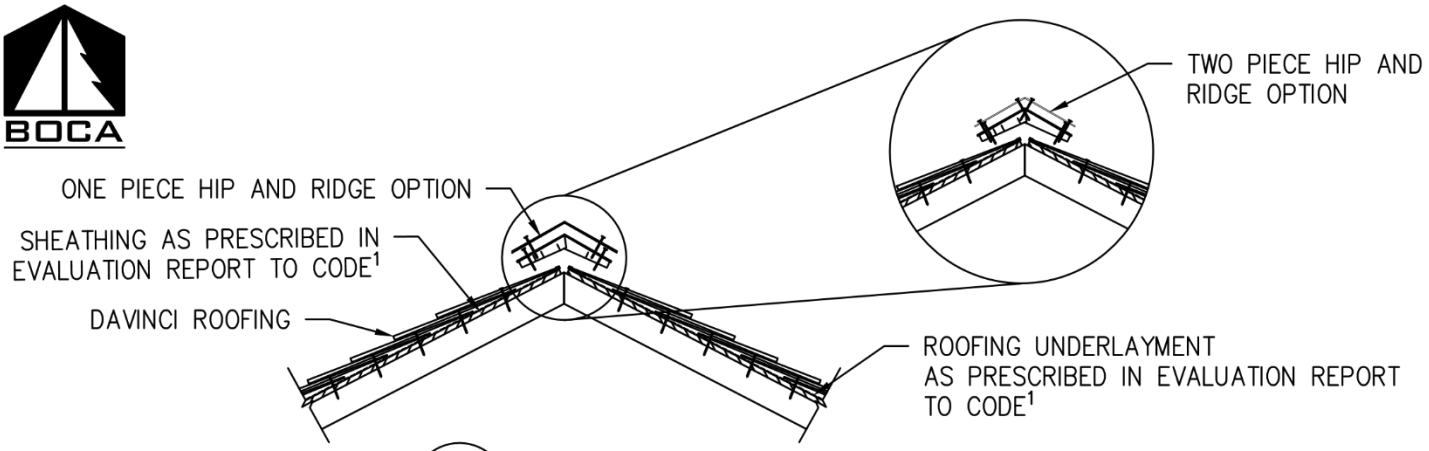


A / 4 DAVINCI ROOFING HIP AND RIDGE DETAIL
SECTION VIEW | NOT-TO-SCALE

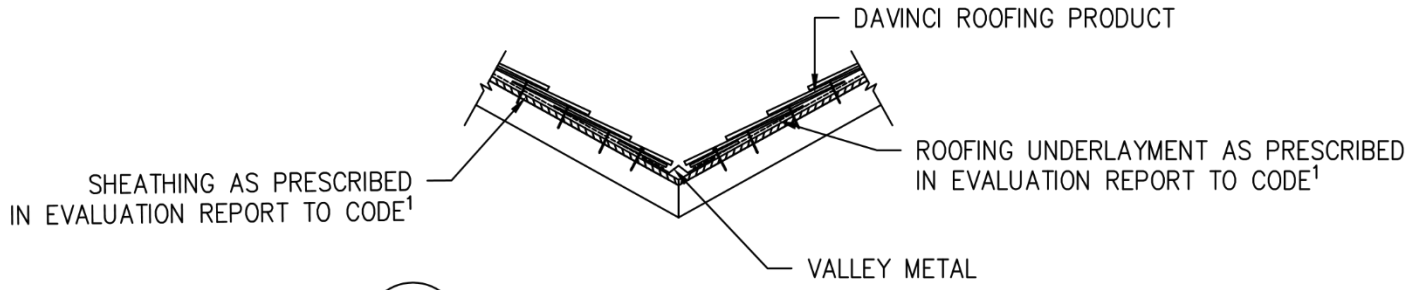


B / 4 DAVINCI ROOFING VALLEY DETAIL
SECTION VIEW | NOT-TO-SCALE

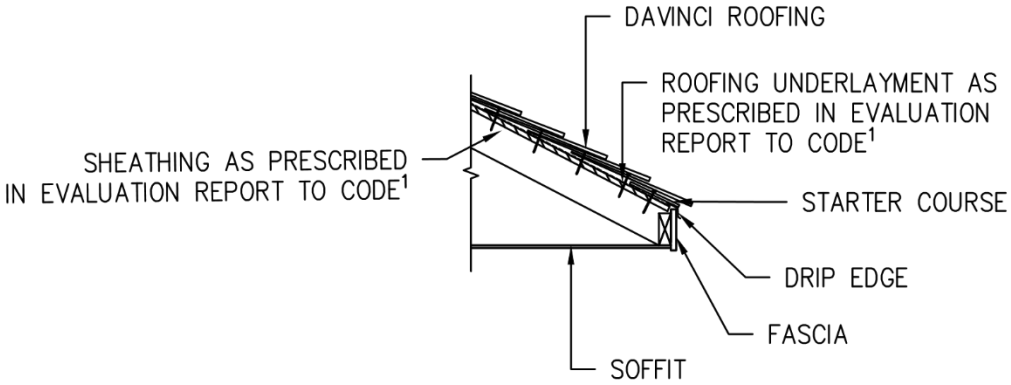


C / 4 DAVINCI ROOFING EAVE DETAIL
SECTION VIEW | NOT-TO-SCALE

COPYRIGHT © 2026 RESERVED. THESE PLANS AND DESIGNS ARE AT ALL TIMES THE PROPERTY OF BOCA ENGINEERING TO BE USED FOR THE PROJECT SHOWN. WRITTEN CONSENT IS REQUIRED FROM THE ENGINEER BEFORE ANY REPRODUCTION.

BOCA ENGINEERING
STRUCTURAL AND CIVIL ENGINEERS
#203-1001 CLOVERDALE AVE, VICTORIA BC V8X 4C9 250-477-7777
INFO@BOCAENGINEERING.COM
WWW.BOCAENGINEERING.COM

| DATE | | 7 | FOR PUBLICATION | | CB |
|---|---|---|---|---|---|
| SEPTEMBER 17, 2026 | | REV. | ISSUE | | APP |
| DRAWING NO. | SHEET NO. | SCALE | DES. | DRN. | CHK. |
| 0064-6136-SK2 | 4 OF 5 | NOT TO SCALE | CB | RQ | CB |

CLIENT: WESTLAKE DAVINCI ROOFSCAPES, LLC

PROJECT: DAVINCI SHAKE AND SLATE ROOFING

TITLE: TYPICAL HIP, RIDGE, VALLEY AND EAVE INSTALLATION DETAILS

1. DRAWING FOR ENGINEERING EVALUATION REPORT: 0064-15-7-6136

NOT FOR USE AS CONSTRUCTION DESIGN DOCUMENTS

| DESIGN LOADS | |
|---|---|
| LIVE | SEE EVALUATION REPORT[1] |
| SNOW | |
| WIND | |
| SEISMIC | |
| TEMPERATURE | |

## LEGEND AND SYMBOLS

A / 1 — DETAIL NUMBER / SHEET DRAWN

A / 1 — SECTION NUMBER / SHEET DRAWN

## ABBREVIATIONS

| | | | |
|---|---|---|---|
| CONT | CONTINUOUS | O.C. | ON CENTER |
| EA | EACH | P.T. | PRESSURE TREATED |
| E/W | EACH WAY | S.G. | SPECIFIC GRAVITY |
| EXT. | EXTERIOR | SPEC. | SPECIFICATION |
| INT. | INTERIOR | NO. | TYPICAL |
| MAX | MAXIMUM | U.N.O. | UNLESS NOTED OTHERWISE |
| MIN | MINIMUM | W/ | WITH |
| NO. | NUMBER | | |

## TESTING AND CODE COMPLIANCE

1. THE SIDING PRODUCT ASSEMBLY SHOWN IS DESIGNED TO COMPLY WITH THE 2024 AND 2021 INTERNATIONAL BUILDING CODE (IBC) AND 2026 FLORIDA BUILDING CODE (FBC).
2. THE STRUCTURAL FRAMING AND SHEATHING SHALL BE DESIGNED AND ANCHORED TO PROVIDE LATERAL BRACING TO NOT EXCEED DEFLECTION LIMITS, AND PROPERLY TRANSFER ALL LOADS TO THE STRUCTURE. FRAMING DESIGN AND INSTALLATION IS THE RESPONSIBILITY OF THE ENGINEER OR ARCHITECT OF RECORD FOR THE PROJECT OF INSTALLATION.
3. THESE DRAWINGS APPLY TO THE TESTING ASSEMBLY ONLY AND DO NOT IMPLY THAT THE SIGNATORY ENGINEER IS THE DESIGNER OF RECORD FOR ANY FUTURE CONSTRUCTION ON WHICH THEY ARE USED.
4. SOME NON-STRUCTURAL COMPONENTS NOW SHOWN AND DO NOT IMPACT STRENGTH FOR ATTACHMENT. TO BE INSTALLED PER CODE AND MAY INCLUDE: FLASHING, INTERIOR INSULATION, INTERIOR FINISH

## INSTALLATION

1. THE INSTALLATION DETAILS DESCRIBED ARE OF THE LABORATORY TESTED ASSEMBLY AND MAY NOT REFLECT ACTUAL CONDITIONS FOR A SPECIFIC SITE. IF SITE CONDITIONS DEVIATE FROM THE REQUIREMENTS DETAILED HEREIN, THE JOB ENGINEER OR ARCHITECT PREPARED SITE-SPECIFIC DOCUMENTS SHALL BE USED.

## MATERIAL STANDARDS

### SHEATHING

1. WOOD-BASED STRUCTURAL SHEATHING:
   - 1.1. PLYWOOD – US DOC PS1-19 OR PS2-18 U.N.O.
   - 1.2. OSB – US DOC PS2-18 U.N.O.

### FASTENERS

1. NAILS TO CONFORM TO ASTM F1667.
2. SCREWS TO CONFORM TO ASME B18.6.1
3. ALL FASTENERS WITH CORROSION-RESISTANT GALVANIZED COATING.

### HIP & RIDGE

INSPIRE CLASSIC SLATE:

ONE PIECE: INSPIRE CLASSIC SLATE ONE-PIECE HIP AND RIDGE TILES ARE INSTALLED AT A 6 TO 7.5-INCH (152 TO 191-mm) EXPOSURE. EACH TILE WILL BE FASTENED WITH (2) NAILS LOCATED IN THE DESIGNATED NAIL TARGET AREAS. HIP AND RIDGE TILES MUST BE SECURED WITH THE SAME TYPE AND NUMBER OF FASTENERS AS THE FIELD TILES.

ALL OTHER DAVINCI ROOFING:

ONE PIECE: TILE SHOULD BE INSTALLED AT 12" EXPOSURE. TILE SHOULD BE NAILED ONCE ON EACH SIDE ABOUT ¾" FROM OUTSIDE EDGE WITH APPROVED FASTENER LONG ENOUGH TO PENETRATE THROUGH ROOF DECK AND EXCEED IT BY 3/16". HIP AND RIDGE SHOULD BE NAILED APPROXIMATELY 12½" FROM BUFF OF TILE AND ½" TO ¾" FROM OUTSIDE EDGE.

TWO PIECE: BOTTOM PIECE OF HIP AND RIDGE SHOULD BE CUT SO TIP DOES NOT EXTEND PAST THE BUTT OF SECOND COURSE. ROOFING THAT MAKES UP A HIP AND RIDGE UNIT SHOULD BE 6" SHAKES OR 7" SLATES AND INSTALLED WITH A TEN-INCH EXPOSURE. USING A CHALK LINE TO ASSURE STRAIGHTNESS, HIP AND RIDGE SHOULD BE INSTALLED ONE PIECE AT A TIME SO THAT THE BUTTS OF TWO SHINGLES ARE ADJACENT AND THE INSIDE EDGES TOUCH.

### VALLEYS

A FULL SHEET OF ASTM D1970 SELF-ADHERING UNDERLAYMENT SHOULD BE CENTERED IN VALLEY WITH MINIMUM 16" WIDE, 28 GAUGE VALLEY METAL NAILED AT 4" O.C. AND 1" FROM EDGE OF METAL. AN 18" STRIP OF ASTM D1970 SELF-ADHERING UNDERLAYMENT SHOULD BE PLACED OVER THE OF THE VALLEY METAL.

COPYRIGHT © 2026 RESERVED. THESE PLANS AND DESIGNS ARE AT ALL TIMES THE PROPERTY OF BOCA ENGINEERING TO BE USED FOR THE PROJECT SHOWN. WRITTEN CONSENT IS REQUIRED FROM THE ENGINEER BEFORE ANY REPRODUCTION.

BOCA ENGINEERING
STRUCTURAL AND CIVIL ENGINEERS
#203-1001 CLOVERDALE AVE, VICTORIA BC V8X 4C9 250-477-7777
INFO@BOCAENGINEERING.COM
WWW.BOCAENGINEERING.COM

| DATE | | 7 | FOR PUBLICATION | | CB |
|---|---|---|---|---|---|
| SEPTEMBER 17, 2026 | | REV. | ISSUE | | APP |
| DRAWING NO. | SHEET NO. | SCALE | DES. | DRN. | CHK. |
| 0064-6136-SK2 | 5 OF 5 | NOT TO SCALE | CB | RQ | CB |

| CLIENT | PROJECT | TITLE |
|---|---|---|
| WESTLAKE DAVINCI ROOFSCAPES, LLC | DAVINCI SHAKE AND SLATE ROOFING | DAVINCI ROOFING GENERAL NOTES |

[1] DRAWING FOR ENGINEERING EVALUATION REPORT: 0064-15-7-6136

NOT FOR USE AS CONSTRUCTION DESIGN DOCUMENTS